MATERIAL SPECIFICATION:

FRAME - GREY IRON TO CONFORM TO CLASS 40 ASTM A48

GRATE - CAST STEEL TO CONFORM TO GRADE 90-60 ASTM A148 OR DUCTILE IRON TO CONFORM TO ASTM A536

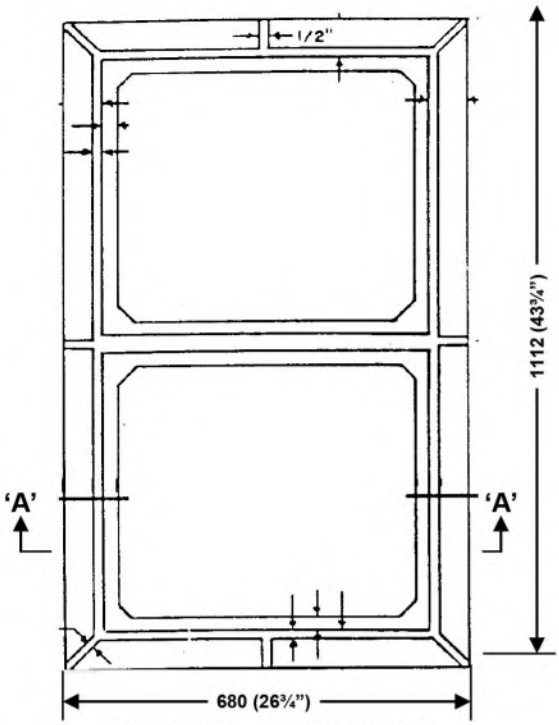

FRAME - TOP VIEW

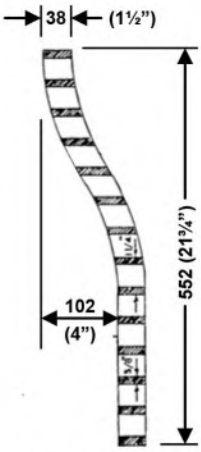

SECTION 'B-B'

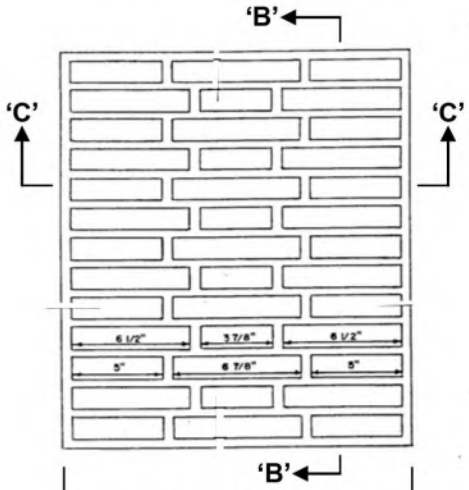

GRATE - TOP VIEW

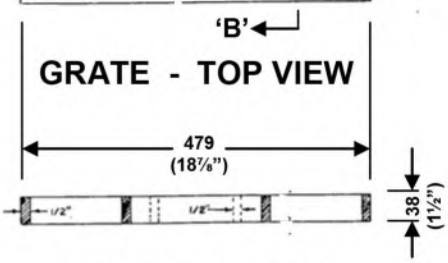

SECTION 'C-C'

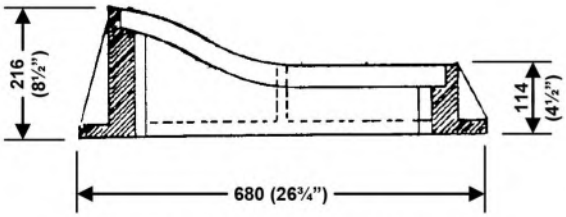

SECTION 'A-A'

SPECIFICATIONS:

THE CASTINGS SHALL BE TRUE TO PATTERN AND FREE FROM CRACKS, GAS HOLES, FLAWS AND EXCESSIVE SHRINKAGE. SURFACES OF THE CASTINGS SHALL BE FREE FROM BURNT ON SAND AND SHALL BE REASONABLY SMOOTH. RUNNERS, RISERS, FINS AND OTHER CAST ON PIECES SHALL BE REMOVED. IN OTHER RESPECT THE CASTINGS SHALL CONFORM TO WHATEVER POINTS MAY BE AGREED UPON BETWEEN THE MANUFACTURER AND THE ENGINEER. UPON REQUEST OF THE ENGINEER THE MANUFACTURER SHALL BE PREPARED TO CERTIFY THAT HIS PRODUCT CONFORMS TO THE REQUIREMENTS OF A.S.T.M. DESIGNATION A-48 (CAST IRON) OR A.S.T.M. A-536 (DUCTILE IRON) .

Norwood Foundry LIMITED

SINCE 1905

CATCH BASIN FRAME & GRATE

K-2

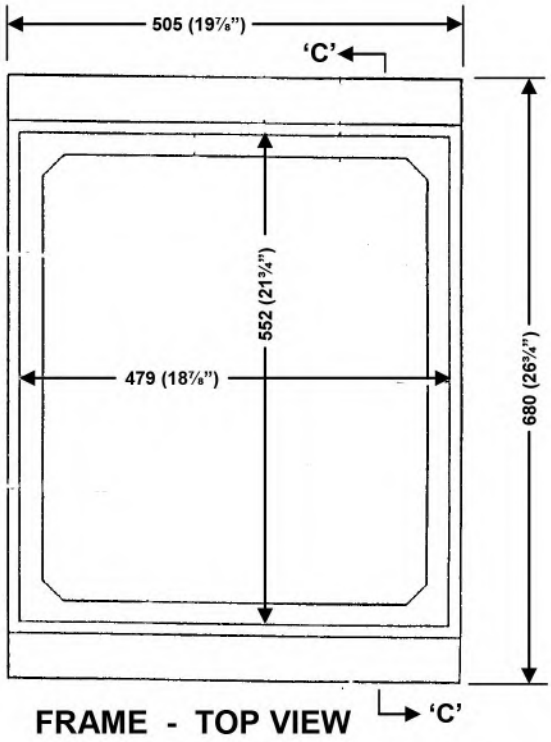

FRAME - TOP VIEW

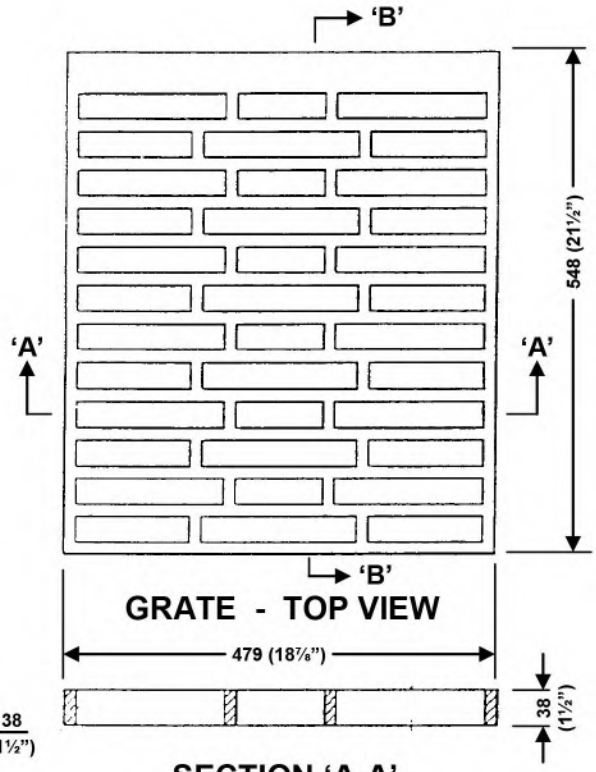

GRATE - TOP VIEW

SECTION 'A-A'

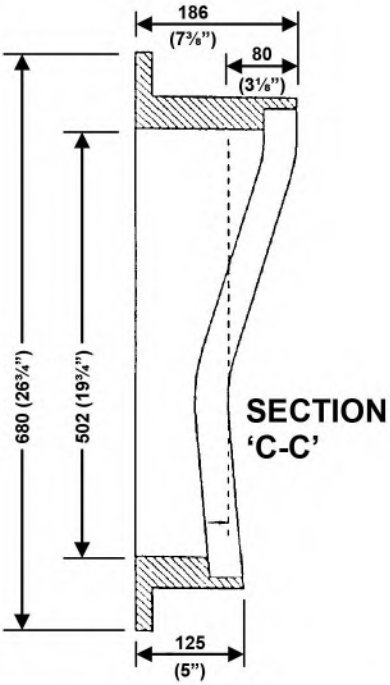

SECTION 'C-C'

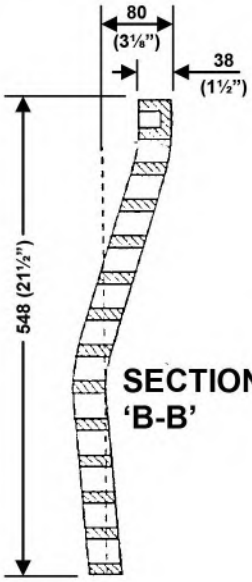

SECTION 'B-B'

MATERIAL SPECIFICATIONS

FRAME: Grey cast iron to conform to class 258 A.S.T.M. A48 (latest edition)

GRATE: Ductile iron to conform to A.S.T.M. A536 (latest edition) Grade 80-55-06

SPECIFICATIONS:

THE CASTINGS SHALL BE TRUE TO PATTERN AND FREE FROM CRACKS, GAS HOLES, FLAWS AND EXCESSIVE SHRINKAGE. SURFACES OF THE CASTINGS SHALL BE FREE FROM BURNT ON SAND AND SHALL BE REASONABLY SMOOTH. RUNNERS, RISERS, FINS AND OTHER CAST ON PIECES SHALL BE REMOVED. IN OTHER RESPECT THE CASTINGS SHALL CONFORM TO WHATEVER POINTS MAY BE AGREED UPON BETWEEN THE MANUFACTURER AND THE ENGINEER. UPON REQUEST OF THE ENGINEER THE MANUFACTURER SHALL BE PREPARED TO CERTIFY THAT HIS PRODUCT CONFORMS TO THE REQUIREMENTS OF A.S.T.M. DESIGNATION A-48 (CAST IRON) OR A.S.T.M. A-536 (DUCTILE IRON) & AASHTO M 306-10

Norwood Foundry LIMITED

SINCE 1905

CATCH BASIN SINGLE FRAME & GRATE

SK-7

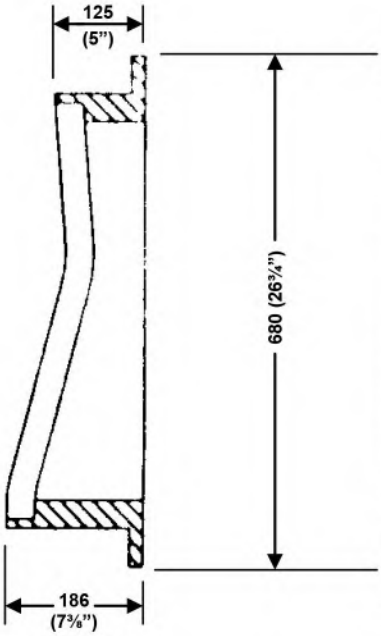

SECTION 'C-C'

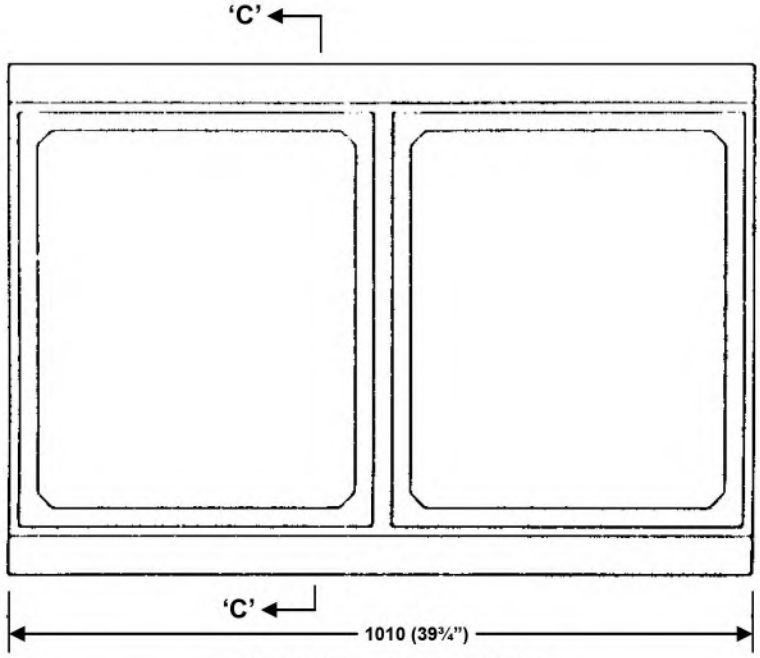

FRAME - TOP VIEW

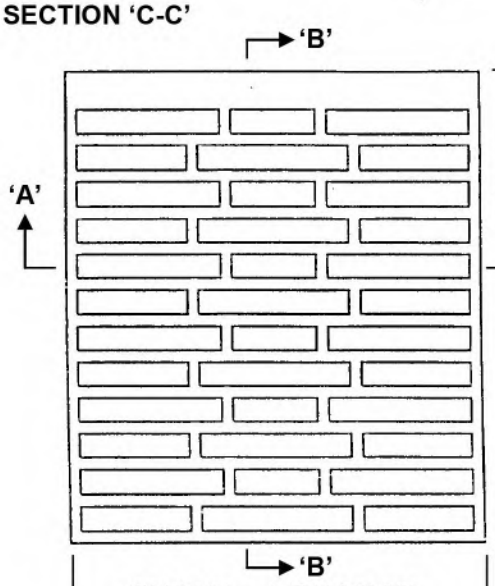

GRATE - TOP VIEW

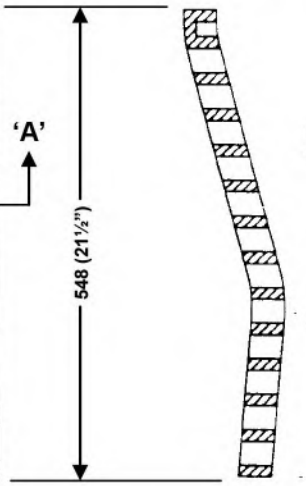

SECTION 'B-B'

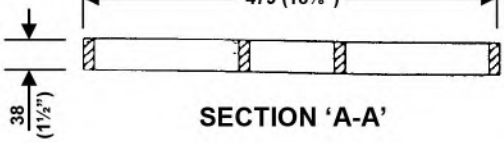

SECTION 'A-A'

MATERIAL SPECIFICATIONS

FRAME: Grey cast iron to conform to class 258 A.S.T.M. A48 (latest edition)

GRATE: Ductile iron to conform to A.S.T.M. A536 (latest edition) Grade 80-55-06

SPECIFICATIONS:

THE CASTINGS SHALL BE TRUE TO PATTERN AND FREE FROM CRACKS, GAS HOLES, FLAWS AND EXCESSIVE SHRINKAGE. SURFACES OF THE CASTINGS SHALL BE FREE FROM BURNT ON SAND AND SHALL BE REASONABLY SMOOTH. RUNNERS, RISERS, FINS AND OTHER CAST ON PIECES SHALL BE REMOVED. IN OTHER RESPECT THE CASTINGS SHALL CONFORM TO WHATEVER POINTS MAY BE AGREED UPON BETWEEN THE MANUFACTURER AND THE ENGINEER. UPON REQUEST OF THE ENGINEER THE MANUFACTURER SHALL BE PREPARED TO CERTIFY THAT HIS PRODUCT CONFORMS TO THE REQUIREMENTS OF A.S.T.M. DESIGNATION A-48 (CAST IRON) OR A.S.T.M. A-536 (DUCTILE IRON) & AASHTO M 306 - 10.

Norwood Foundry LIMITED
SINCE 1905

CATCH BASIN DOUBLE FRAME & GRATE

DK-7

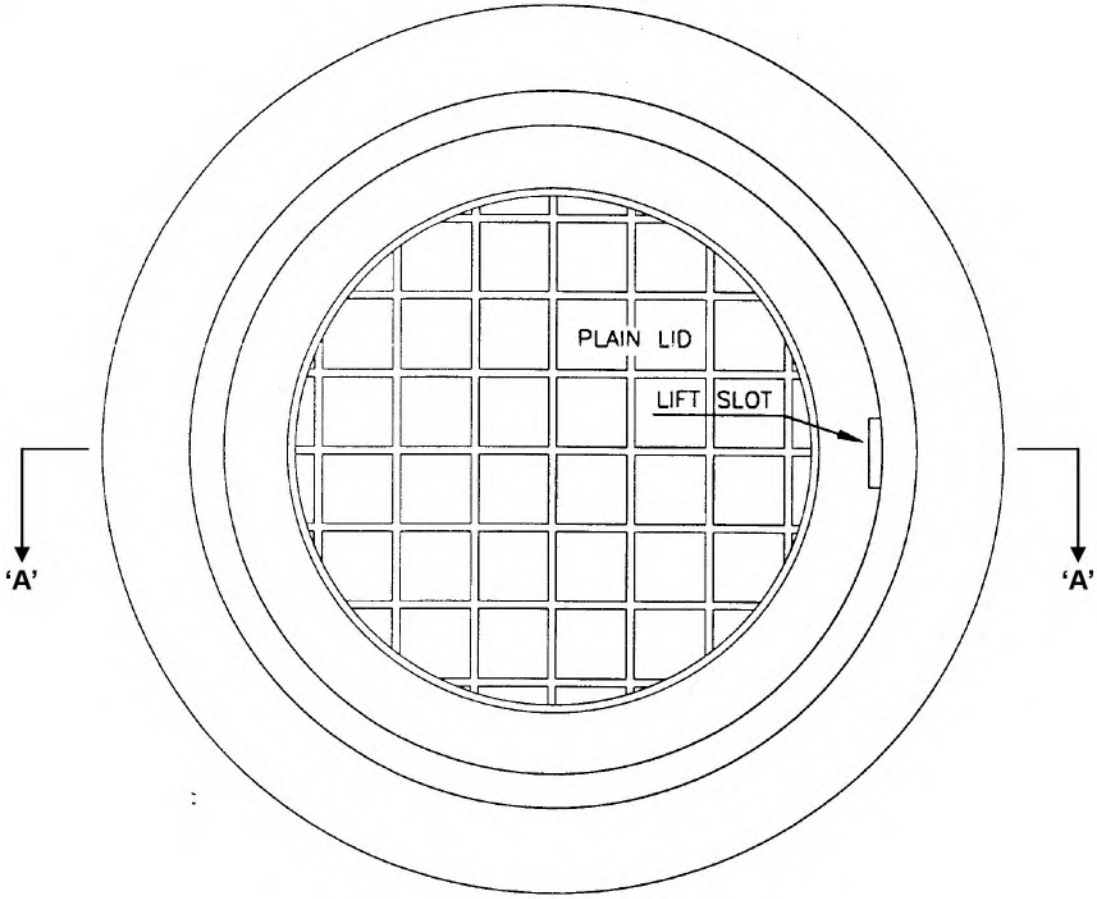

FRAME & COVER - TOP VIEW

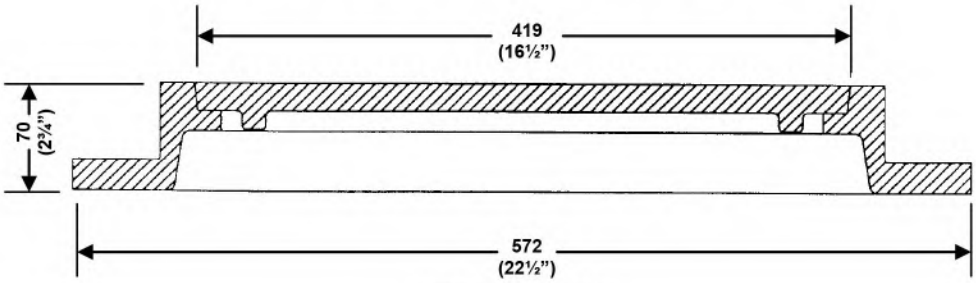

SECTION 'A-A'

SPECIFICATIONS:

THE CASTINGS SHALL BE TRUE TO PATTERN AND FREE FROM CRACKS, GAS HOLES, FLAWS AND EXCESSIVE SHRINKAGE. SURFACES OF THE CASTINGS SHALL BE FREE FROM BURNT ON SAND AND SHALL BE REASONABLY SMOOTH. RUNNERS, RISERS, FINS AND OTHER CAST ON PIECES SHALL BE REMOVED. IN OTHER RESPECT THE CASTINGS SHALL CONFORM TO WHATEVER POINTS MAY BE AGREED UPON BETWEEN THE MANUFACTURER AND THE ENGINEER. UPON REQUEST OF THE ENGINEER THE MANUFACTURER SHALL BE PREPARED TO CERTIFY THAT HIS PRODUCT CONFORMS TO THE REQUIREMENTS OF A.S.T.M. DESIGNATION A-48.

Norwood Foundry LIMITED

SINCE 1905

400mm (16") ROUND INSPECTION FRAME & COVER

NF-10

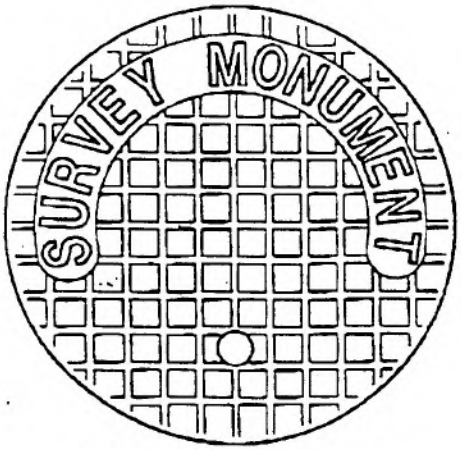

COVER TOP VIEW

Cast Iron to conform to class 258
A.S.T.M. A48

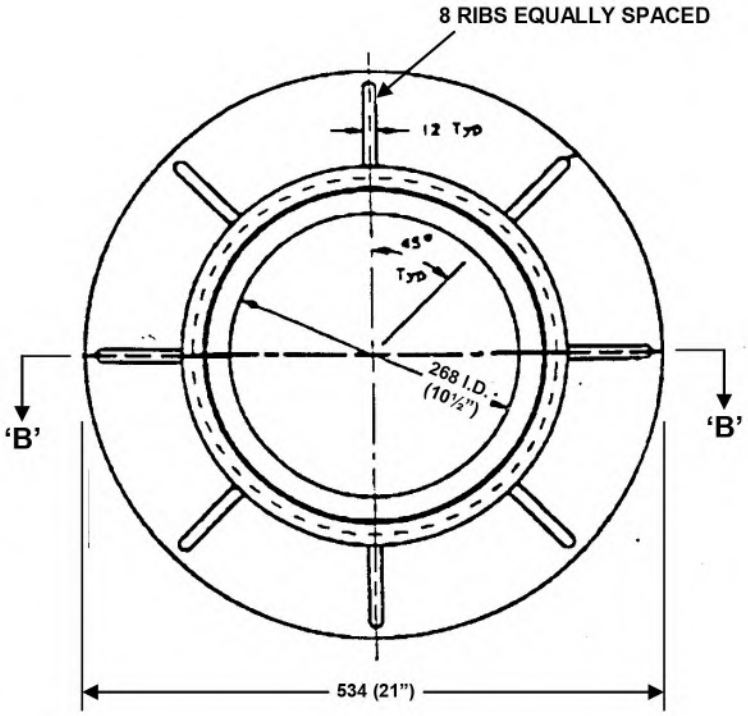

FRAME TOP VIEW

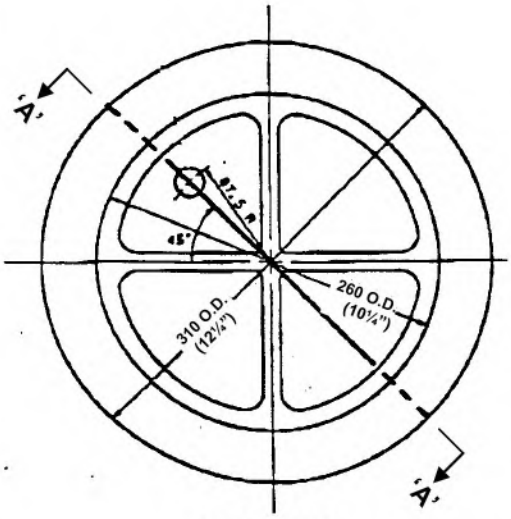

COVER BOTTOM VIEW

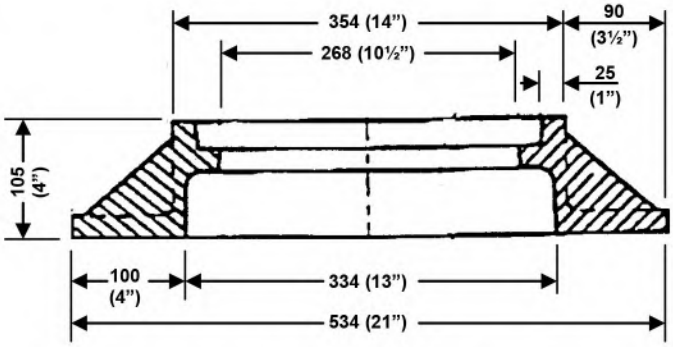

SECTION 'B-B'

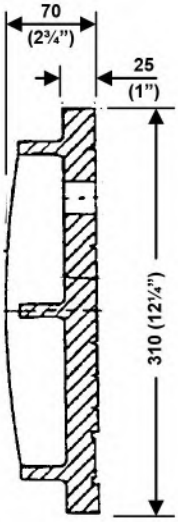

SECTION 'A-A'

Norwood Foundry LIMITED
SINCE 1905

SURVEY CONTROL MARKER FRAME AND COVER

NF-12

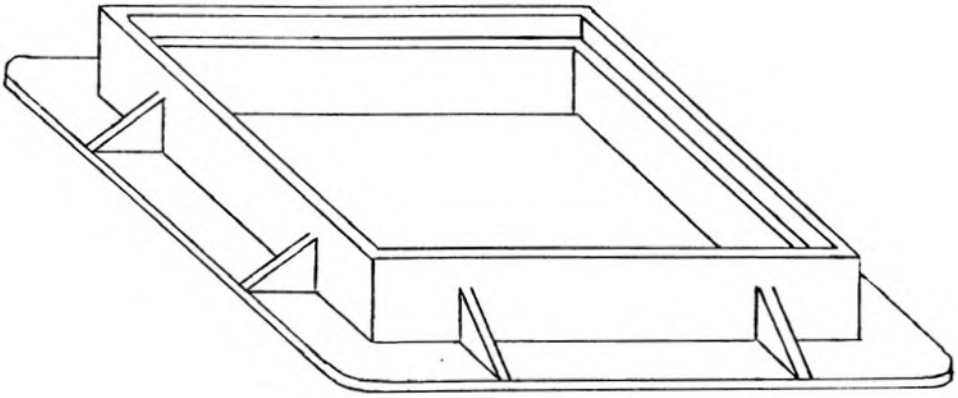

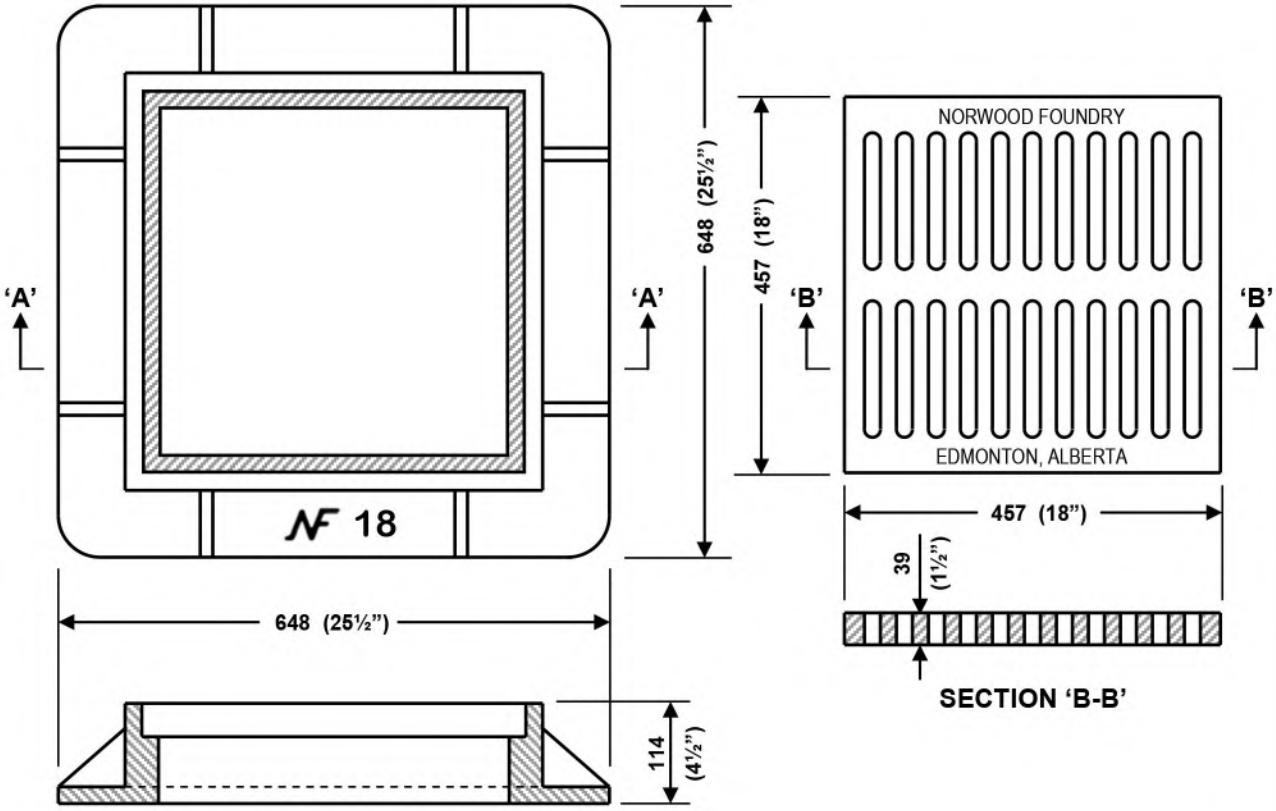

SPECIFICATIONS:

THE CASTINGS SHALL BE TRUE TO PATTERN AND FREE FROM CRACKS, GAS HOLES, FLAWS AND EXCESSIVE SHRINKAGE. SURFACES OF THE CASTINGS SHALL BE FREE FROM BURNT ON SAND AND SHALL BE REASONABLY SMOOTH. RUNNERS, RISERS, FINS AND OTHER CAST ON PIECES SHALL BE REMOVED. IN OTHER RESPECT THE CASTINGS SHALL CONFORM TO WHATEVER POINTS MAY BE AGREED UPON BETWEEN THE MANUFACTURER AND THE ENGINEER. UPON REQUEST OF THE ENGINEER THE MANUFACTURER SHALL BE PREPARED TO CERTIFY THAT HIS PRODUCT CONFORMS TO THE REQUIREMENTS OF A.S.T.M. DESIGNATION A-48.

Norwood Foundry LIMITED

SINCE 1905

457mm (18") SQUARE CATCH BASIN

NF-18

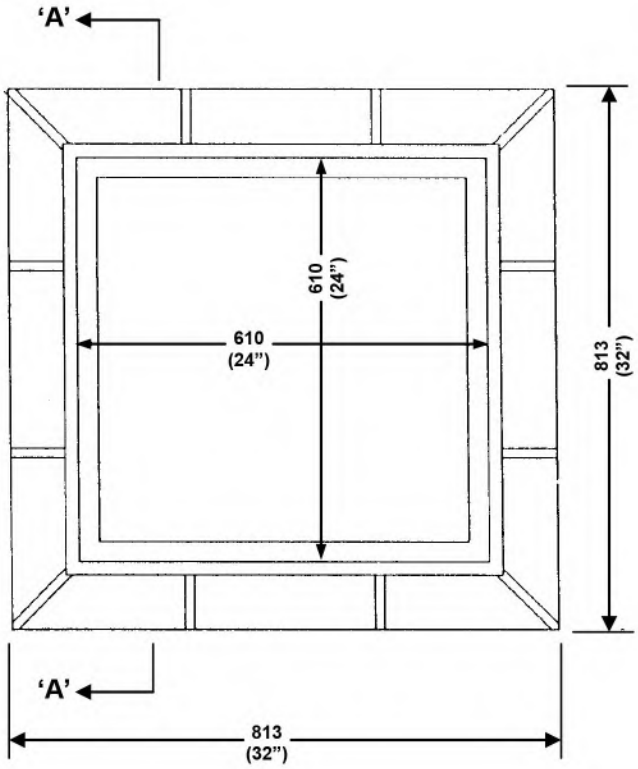

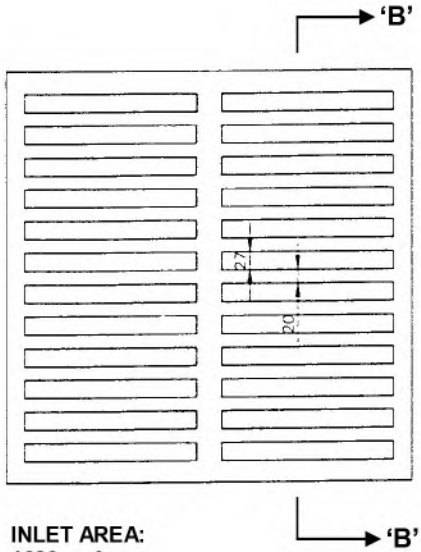

INLET AREA:
1680 cm²
(260 in²)

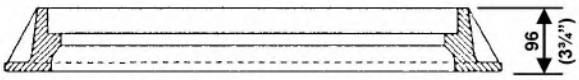

SECTION 'A-A'

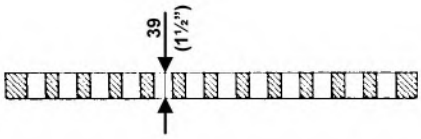

SECTION 'B-B'

SPECIFICATIONS:

THE CASTINGS SHALL BE TRUE TO PATTERN AND FREE FROM CRACKS, GAS HOLES, FLAWS AND EXCESSIVE SHRINKAGE. SURFACES OF THE CASTINGS SHALL BE FREE FROM BURNT ON SAND AND SHALL BE REASONABLY SMOOTH. RUNNERS, RISERS, FINS AND OTHER CAST ON PIECES SHALL BE REMOVED. IN OTHER RESPECT THE CASTINGS SHALL CONFORM TO WHATEVER POINTS MAY BE AGREED UPON BETWEEN THE MANUFACTURER AND THE ENGINEER. UPON REQUEST OF THE ENGINEER THE MANUFACTURER SHALL BE PREPARED TO CERTIFY THAT HIS PRODUCT CONFORMS TO THE REQUIREMENTS OF A.S.T.M. DESIGNATION A-48.

Norwood Foundry
LIMITED
SINCE 1905

610mm (24") SQUARE CATCH BASIN FRAME & GRATE

NF-31

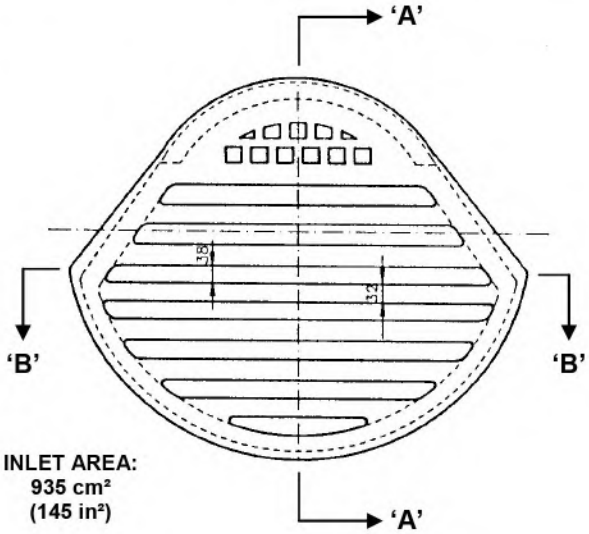

INLET AREA:
935 cm²
(145 in²)

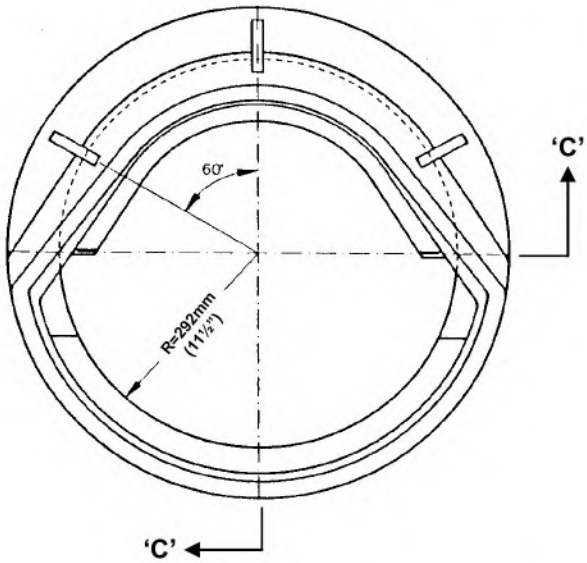

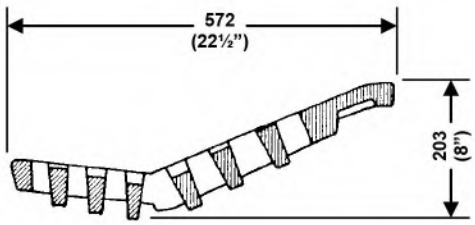

SECTION 'A-A'

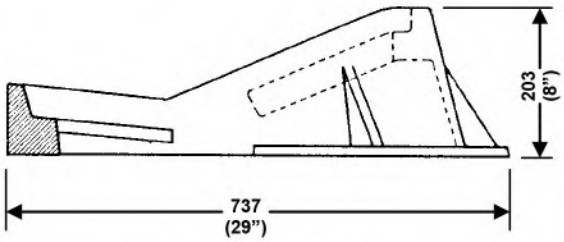

SECTION 'C-C'

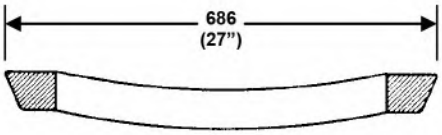

SECTION 'B-B'

DEPTH OF PONDING (cm)	CAPACITY (L/s)
2.54	26.30
5.08	44.30
7.62	61.80
10.16	73.70
12.70	83.70
15.24	92.70
17.78	100.80
20.32	108.40
22.86	115.40
25.40	122.00

SPECIFICATIONS:

THE CASTINGS SHALL BE TRUE TO PATTERN AND FREE FROM CRACKS, GAS HOLES, FLAWS AND EXCESSIVE SHRINKAGE. SURFACES OF THE CASTINGS SHALL BE FREE FROM BURNT ON SAND AND SHALL BE REASONABLY SMOOTH. RUNNERS, RISERS, FINS AND OTHER CAST ON PIECES SHALL BE REMOVED. IN OTHER RESPECT THE CASTINGS SHALL CONFORM TO WHATEVER POINTS MAY BE AGREED UPON BETWEEN THE MANUFACTURER AND THE ENGINEER. UPON REQUEST OF THE ENGINEER THE MANUFACTURER SHALL BE PREPARED TO CERTIFY THAT HIS PRODUCT CONFORMS TO THE REQUIREMENTS OF A.S.T.M. DESIGNATION A-48.

Norwood Foundry
LIMITED
SINCE 1905

CATCH BASIN FRAME & GRATE

FOR MONOLITHIC CURB & GUTTER

NF-33

CGY.
K-4

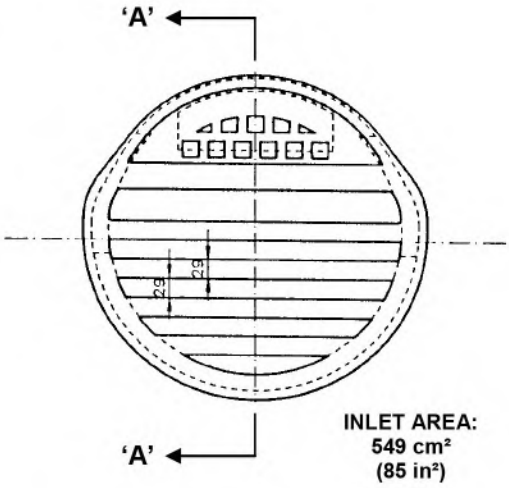

GRATE - TOP VIEW

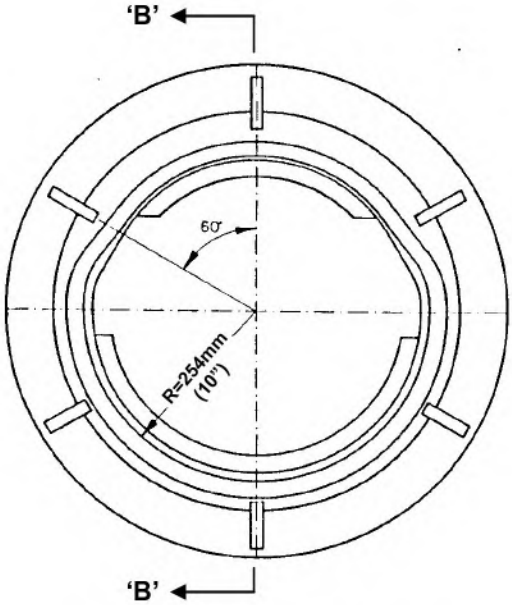

FRAME - TOP VIEW

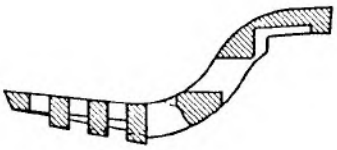

SECTION 'A-A'

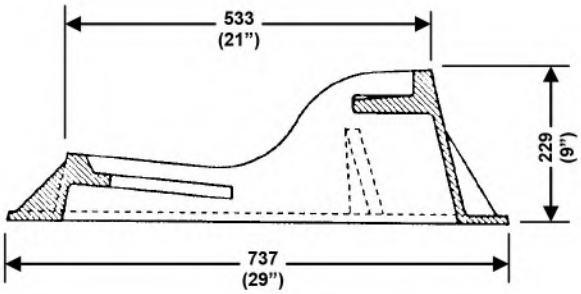

SECTION 'B-B'

DEPTH OF PONDING (cm)	CAPACITY (L/s)
2.54	17.2
5.08	28.2
7.62	37.5
10.16	44.2
12.70	50.0
15.24	55.1
17.78	59.8
20.32	64.2
22.86	68.3
25.40	72.2

SPECIFICATIONS:

THE CASTINGS SHALL BE TRUE TO PATTERN AND FREE FROM CRACKS, GAS HOLES, FLAWS AND EXCESSIVE SHRINKAGE. SURFACES OF THE CASTINGS SHALL BE FREE FROM BURNT ON SAND AND SHALL BE REASONABLY SMOOTH. RUNNERS, RISERS, FINS AND OTHER CAST ON PIECES SHALL BE REMOVED. IN OTHER RESPECT THE CASTINGS SHALL CONFORM TO WHATEVER POINTS MAY BE AGREED UPON BETWEEN THE MANUFACTURER AND THE ENGINEER. UPON REQUEST OF THE ENGINEER THE MANUFACTURER SHALL BE PREPARED TO CERTIFY THAT HIS PRODUCT CONFORMS TO THE REQUIREMENTS OF A.S.T.M. DESIGNATION A-48.

Norwood Foundry
LIMITED
SINCE 1905

CATCH BASIN FRAME & GRATE

FOR ROLLED FACE CURB AND GUTTER

NF-35

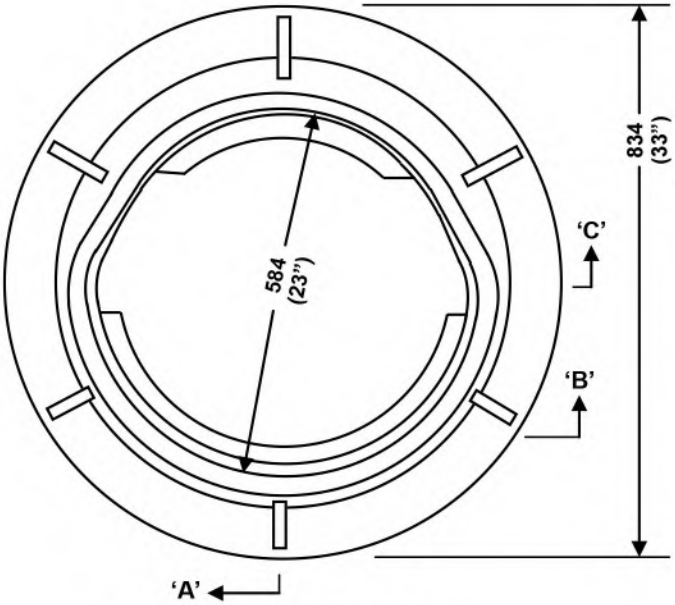

FRAME - TOP VIEW

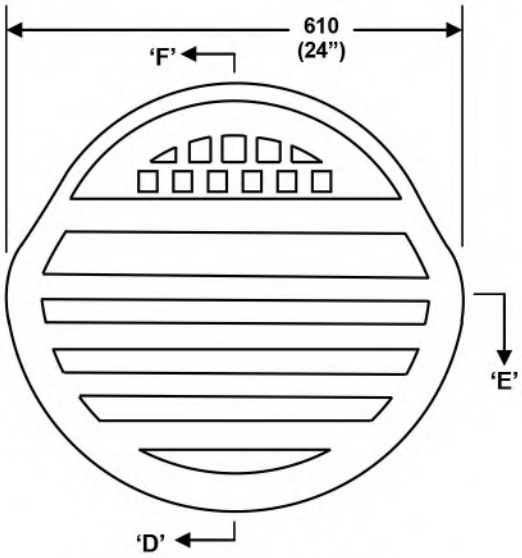

GRATE - TOP VIEW

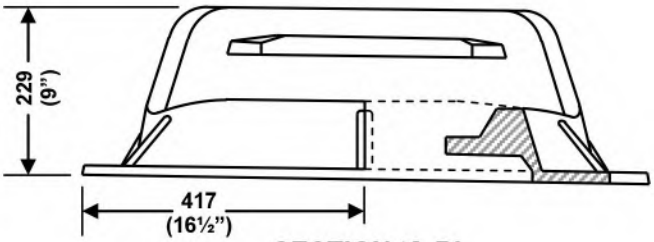

SECTION 'A-B'

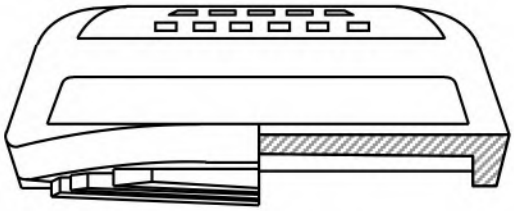

SECTION 'D-E'

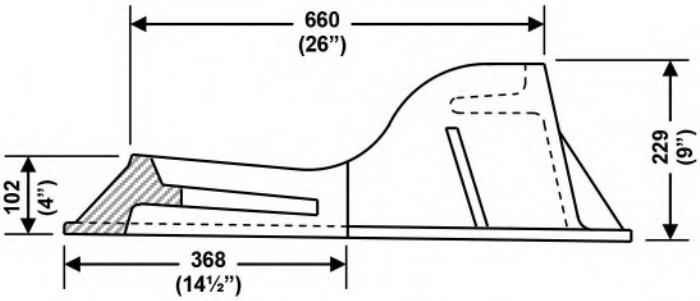

SECTION 'A-C'

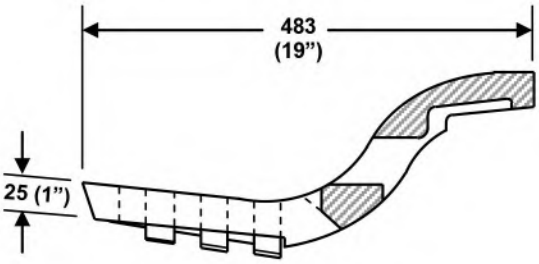

SECTION 'E-F'

SPECIFICATIONS:

THE CASTINGS SHALL BE TRUE TO PATTERN AND FREE FROM CRACKS, GAS HOLES, FLAWS AND EXCESSIVE SHRINKAGE. SURFACES OF THE CASTINGS SHALL BE FREE FROM BURNT ON SAND AND SHALL BE REASONABLY SMOOTH. RUNNERS, RISERS, FINS AND OTHER CAST ON PIECES SHALL BE REMOVED. IN OTHER RESPECT THE CASTINGS SHALL CONFORM TO WHATEVER POINTS MAY BE AGREED UPON BETWEEN THE MANUFACTURER AND THE ENGINEER. UPON REQUEST OF THE ENGINEER THE MANUFACTURER SHALL BE PREPARED TO CERTIFY THAT HIS PRODUCT CONFORMS TO THE REQUIREMENTS OF A.S.T.M. DESIGNATION A-48.

Norwood Foundry
LIMITED
SINCE 1905

CATCH BASIN FRAME & GRATE

FOR ROLLED FACE CURB & GUTTER

NF-35A

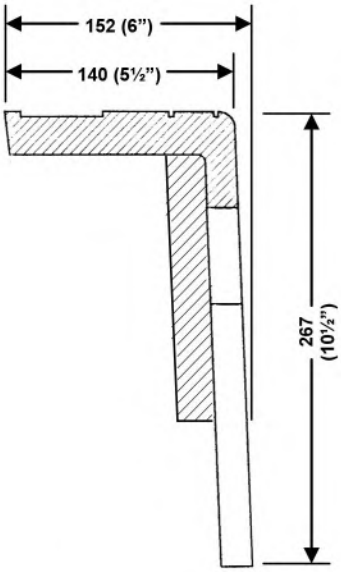

SECTION 'A-A'

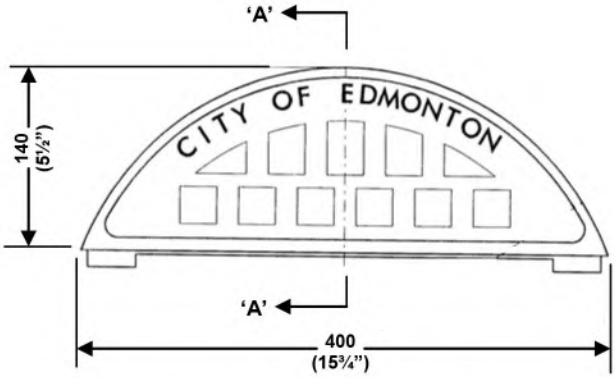

TOP VIEW - TOP PIECE

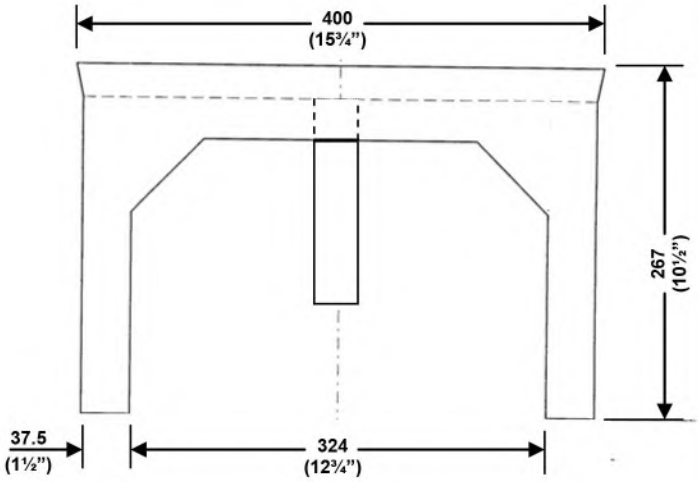

FRONT VIEW - TOP PIECE

NOTE: DUCTILE IRON MATERIAL

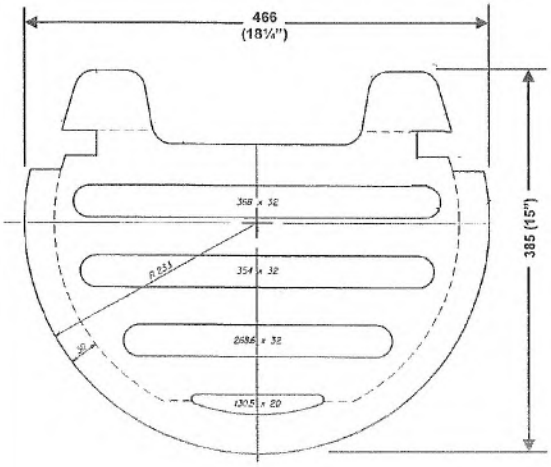

TOP VIEW - BOTTOM PIECE

NOTE: CAST IRON MATERIAL

SPECIFICATIONS:

THE CASTINGS SHALL BE TRUE TO PATTERN AND FREE FROM CRACKS, GAS HOLES, FLAWS AND EXCESSIVE SHRINKAGE. SURFACES OF THE CASTINGS SHALL BE FREE FROM BURNT ON SAND AND SHALL BE REASONABLY SMOOTH. RUNNERS, RISERS, FINS AND OTHER CAST ON PIECES SHALL BE REMOVED. IN OTHER RESPECT THE CASTINGS SHALL CONFORM TO WHATEVER POINTS MAY BE AGREED UPON BETWEEN THE MANUFACTURER AND THE ENGINEER. UPON REQUEST OF THE ENGINEER THE MANUFACTURER SHALL BE PREPARED TO CERTIFY THAT HIS PRODUCT CONFORMS TO THE REQUIREMENTS OF A.S.T.M. DESIGNATION A-48 (CAST IRON) OR A.S.T.M. A-536 (DUCTILE IRON) & AASHTO M 306-10.

Norwood Foundry LIMITED
SINCE 1905

STANDARD SIDE INLET CATCH BASIN
TWO PIECE COVER
FOR 190mm (7½") CURB AND GUTTER

NF-36

EDM. #2A

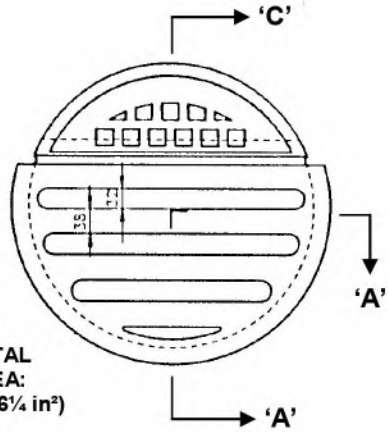

HORIZONTAL
INLET AREA:
363 cm² (56¼ in²)

GRATE - TOP VIEW

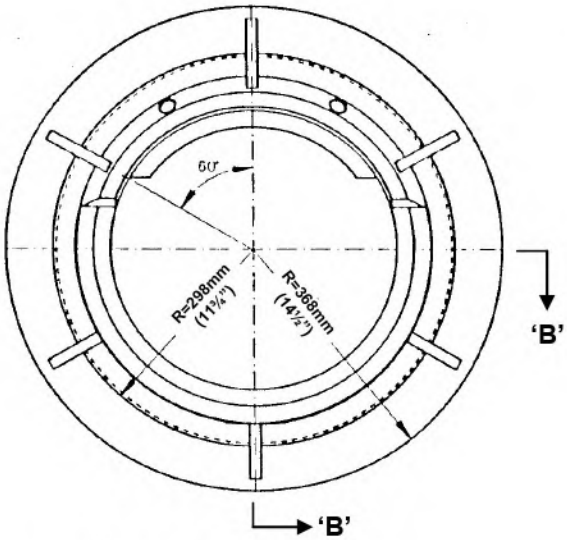

FRAME - TOP VIEW

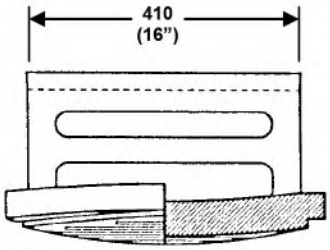

VERTICAL
INLET AREA:
288 cm² (44⅔ in²)

FRONT ELEVATION & SECTION 'A-A'

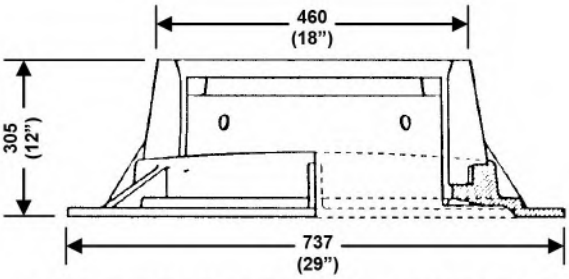

FRONT ELEVATION & SECTION 'B-B'

DEPTH OF PONDING (cm)	CAPACITY (L/s)
2.54	15.6
5.08	27.9
7.62	46.3
10.16	55.6
12.70	66.3
15.24	76.2
17.78	83.9
20.32	90.6
22.86	97.3
25.40	103.3

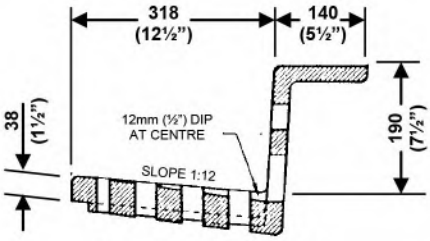

SECTION 'C-A'

SPECIFICATIONS:

THE CASTINGS SHALL BE TRUE TO PATTERN AND FREE FROM CRACKS, GAS HOLES, FLAWS AND EXCESSIVE SHRINKAGE. SURFACES OF THE CASTINGS SHALL BE FREE FROM BURNT ON SAND AND SHALL BE REASONABLY SMOOTH. RUNNERS, RISERS, FINS AND OTHER CAST ON PIECES SHALL BE REMOVED. IN OTHER RESPECT THE CASTINGS SHALL CONFORM TO WHATEVER POINTS MAY BE AGREED UPON BETWEEN THE MANUFACTURER AND THE ENGINEER. UPON REQUEST OF THE ENGINEER THE MANUFACTURER SHALL BE PREPARED TO CERTIFY THAT HIS PRODUCT CONFORMS TO THE REQUIREMENTS OF A.S.T.M. DESIGNATION A-48 & AASHTO M 306-10.

Norwood Foundry
LIMITED
SINCE 1905

STANDARD SIDE INLET CATCH BASIN

FRAME AND GRATE

FOR 190mm (7½") CURB & GUTTER

NF-36

EDM. #2

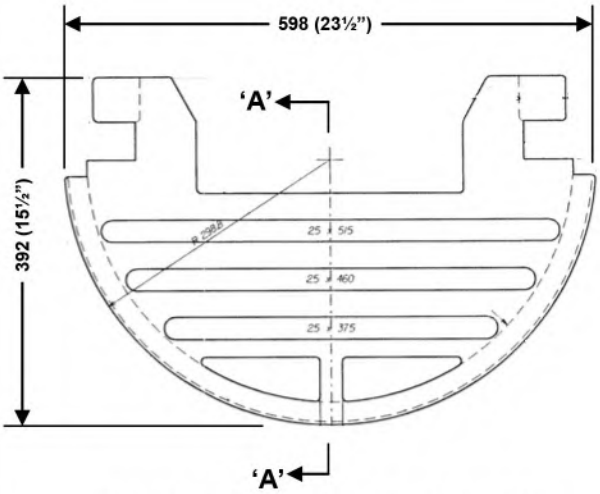

TOP VIEW - BOTTOM PIECE

NOTE: CAST IRON MATERIAL

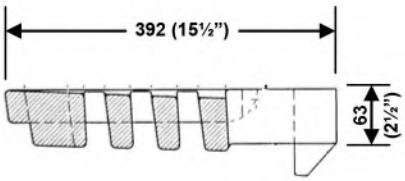

SECTION 'A-A'

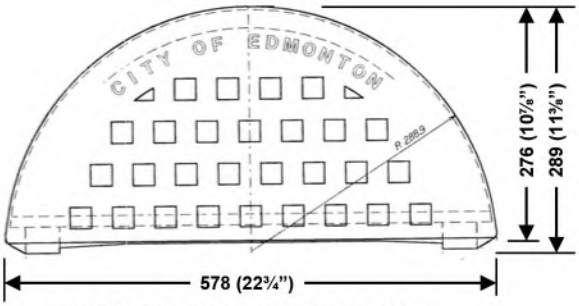

TOP VIEW - TOP PIECE

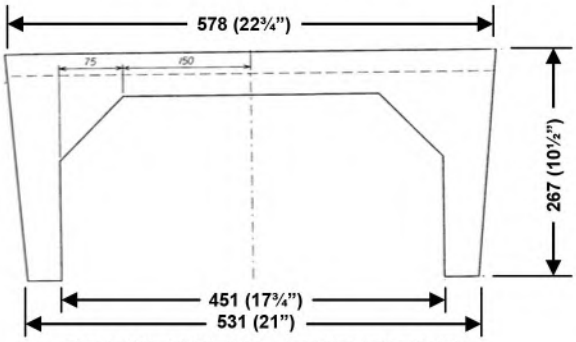

FRONT VIEW - TOP PIECE

NOTE: DUCTILE IRON MATERIAL

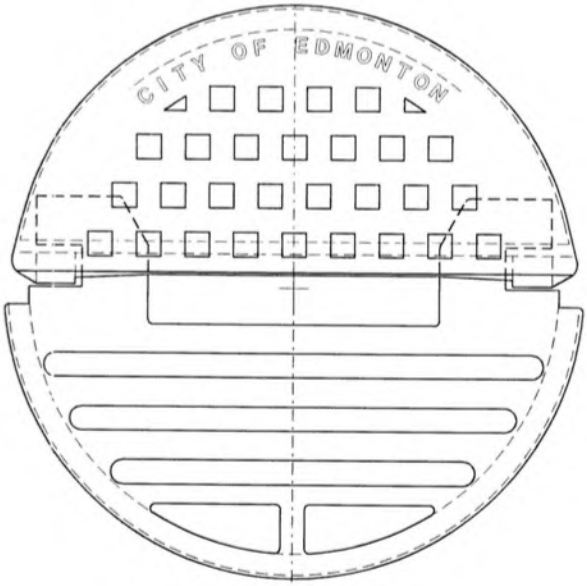

TOP VIEW

COVER COMPONENTS ASSEMBLED

SPECIFICATIONS:

THE CASTINGS SHALL BE TRUE TO PATTERN AND FREE FROM CRACKS, GAS HOLES, FLAWS AND EXCESSIVE SHRINKAGE. SURFACES OF THE CASTINGS SHALL BE FREE FROM BURNT ON SAND AND SHALL BE REASONABLY SMOOTH. RUNNERS, RISERS, FINS AND OTHER CAST ON PIECES SHALL BE REMOVED. IN OTHER RESPECT THE CASTINGS SHALL CONFORM TO WHATEVER POINTS MAY BE AGREED UPON BETWEEN THE MANUFACTURER AND THE ENGINEER. UPON REQUEST OF THE ENGINEER THE MANUFACTURER SHALL BE PREPARED TO CERTIFY THAT HIS PRODUCT CONFORMS TO THE REQUIREMENTS OF A.S.T.M. DESIGNATION A-48 (CAST IRON) OR A.S.T.M. A-536 (DUCTILE IRON) & AASHTO M 306-10.

Norwood Foundry LIMITED

SINCE 1905

STANDARD SIDE INLET CATCHBASIN

TWO PIECE COVER

FOR 190mm (7½") CURB AND GUTTER

NF-36A

EDM. #4A

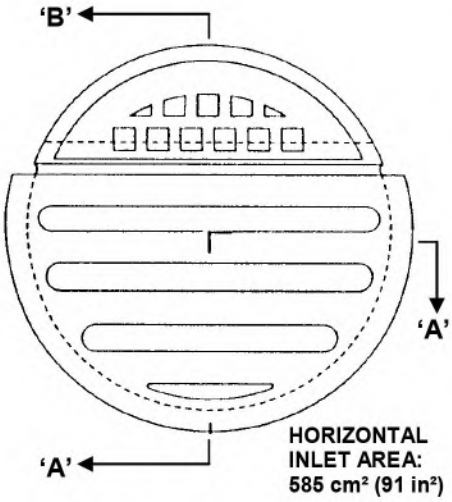

COVER - TOP VIEW

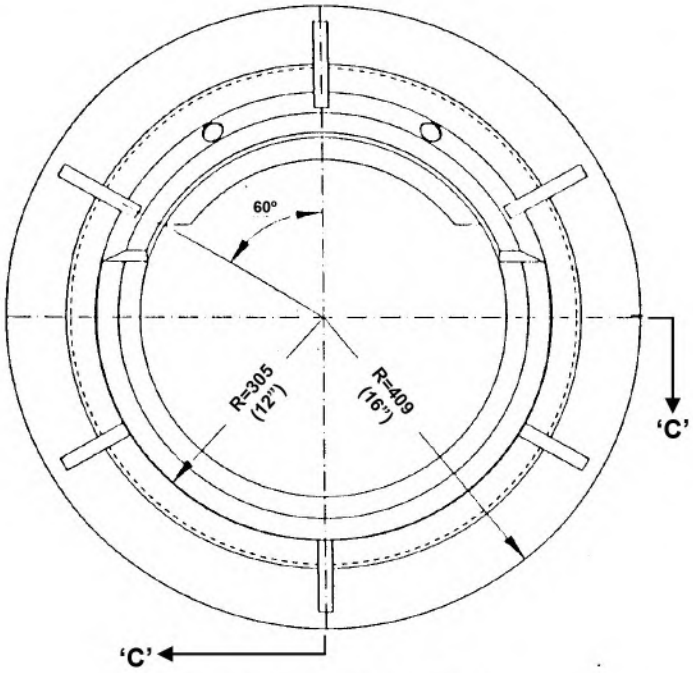

FRAME - TOP VIEW

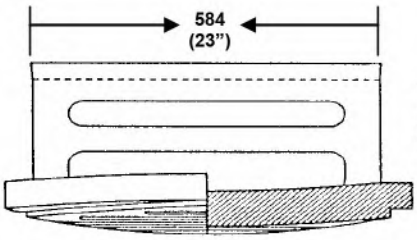

VERTICAL
INLET AREA:
643 cm² (100 in²)

FRONT ELEVATION
& SECTION 'A-A'

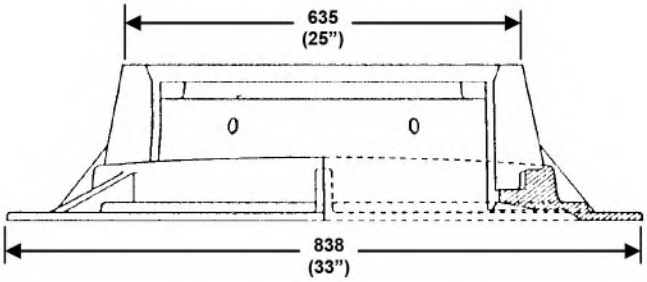

FRONT ELEVATION
& SECTION 'C-C'

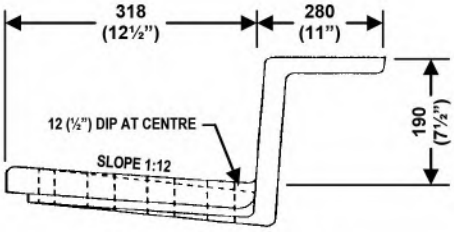

SECTION 'A-B'

SPECIFICATIONS:

THE CASTINGS SHALL BE TRUE TO PATTERN AND FREE FROM CRACKS, GAS HOLES, FLAWS AND EXCESSIVE SHRINKAGE. SURFACES OF THE CASTINGS SHALL BE FREE FROM BURNT ON SAND AND SHALL BE REASONABLY SMOOTH. RUNNERS, RISERS, FINS AND OTHER CAST ON PIECES SHALL BE REMOVED. IN OTHER RESPECT THE CASTINGS SHALL CONFORM TO WHATEVER POINTS MAY BE AGREED UPON BETWEEN THE MANUFACTURER AND THE ENGINEER. UPON REQUEST OF THE ENGINEER THE MANUFACTURER SHALL BE PREPARED TO CERTIFY THAT HIS PRODUCT CONFORMS TO THE REQUIREMENTS OF A.S.T.M. DESIGNATION A-48 & AASHTO M 306-10.

Norwood Foundry
LIMITED
SINCE 1905

STANDARD SIDE INLET CATCH BASIN
FRAME & GRATE
FOR 190mm (7½") CURB & GUTTER

NF-36A

EDM.
#4

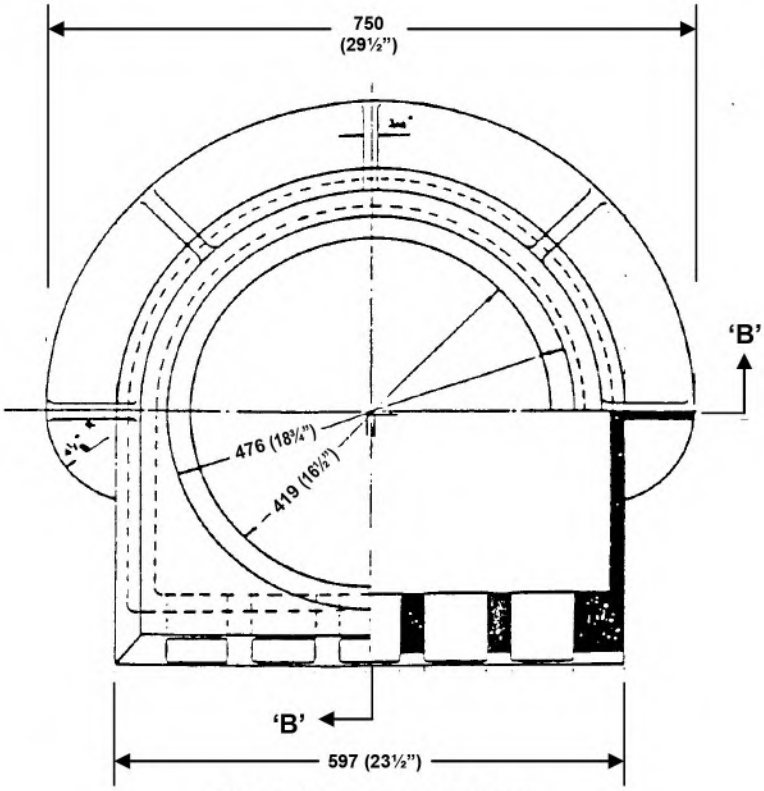

FRAME - TOP VIEW & SECTION 'A-A'

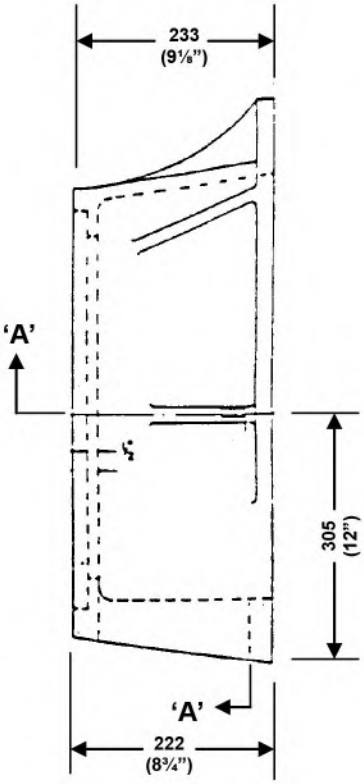

SIDE VIEW

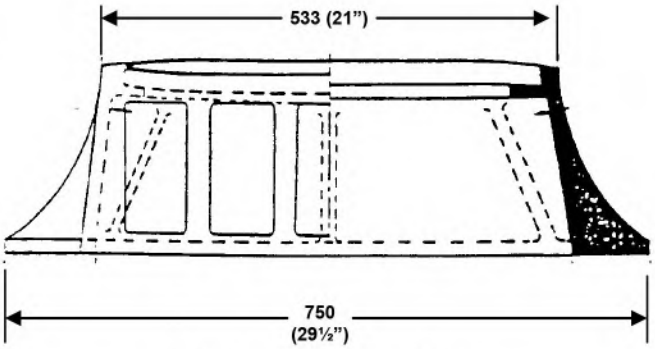

FRONT ELEVATION & SECTION 'B-B'

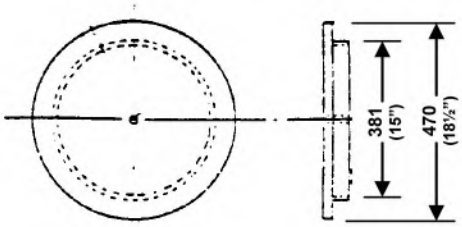

COVER - TOP & SIDE VIEW

SPECIFICATIONS:

THE CASTINGS SHALL BE TRUE TO PATTERN AND FREE FROM CRACKS, GAS HOLES, FLAWS AND EXCESSIVE SHRINKAGE. SURFACES OF THE CASTINGS SHALL BE FREE FROM BURNT ON SAND AND SHALL BE REASONABLY SMOOTH. RUNNERS, RISERS, FINS AND OTHER CAST ON PIECES SHALL BE REMOVED. IN OTHER RESPECT THE CASTINGS SHALL CONFORM TO WHATEVER POINTS MAY BE AGREED UPON BETWEEN THE MANUFACTURER AND THE ENGINEER. UPON REQUEST OF THE ENGINEER THE MANUFACTURER SHALL BE PREPARED TO CERTIFY THAT HIS PRODUCT CONFORMS TO THE REQUIREMENTS OF A.S.T.M. DESIGNATION A-48 & AASHTO M 306-10.

Norwood Foundry LIMITED

SINCE 1905

STANDARD SIDE INLET CATCH BASIN

FRAME AND COVER

NF-37

EDM. #1

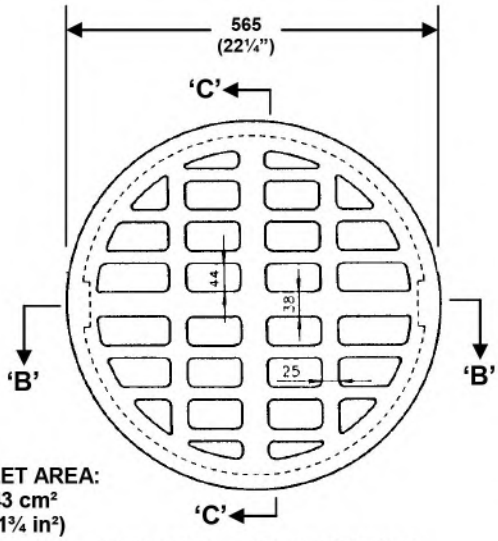

INLET AREA:
1043 cm²
(161¾ in²)

GRATE - TOP VIEW

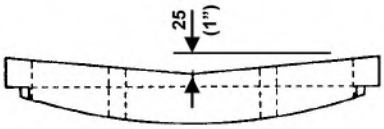

SECTION 'B-B'

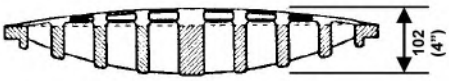

SECTION 'C-C'

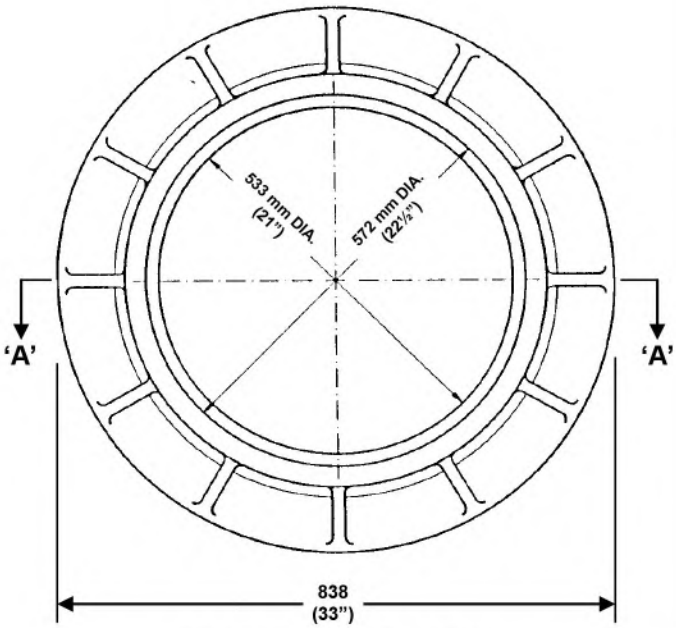

FRAME - TOP VIEW

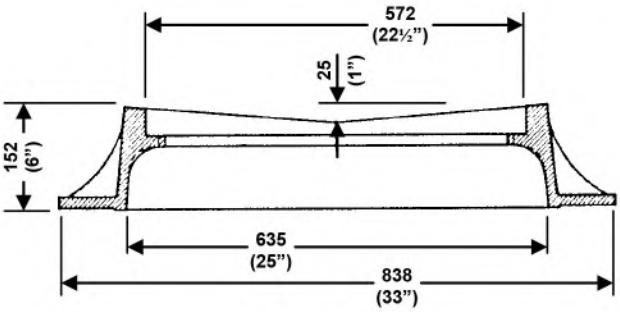

SECTION 'A-A'

DEPTH OF PONDING (cm)	CAPACITY (L/s)
2.54	44.2
5.08	62.5
7.62	76.5
10.16	88.3
12.70	98.8
15.24	108.2
17.78	116.8
20.32	124.9
22.86	132.5
25.40	139.6

SPECIFICATIONS:

THE CASTINGS SHALL BE TRUE TO PATTERN AND FREE FROM CRACKS, GAS HOLES, FLAWS AND EXCESSIVE SHRINKAGE. SURFACES OF THE CASTINGS SHALL BE FREE FROM BURNT ON SAND AND SHALL BE REASONABLY SMOOTH. RUNNERS, RISERS, FINS AND OTHER CAST ON PIECES SHALL BE REMOVED. IN OTHER RESPECT THE CASTINGS SHALL CONFORM TO WHATEVER POINTS MAY BE AGREED UPON BETWEEN THE MANUFACTURER AND THE ENGINEER. UPON REQUEST OF THE ENGINEER THE MANUFACTURER SHALL BE PREPARED TO CERTIFY THAT HIS PRODUCT CONFORMS TO THE REQUIREMENTS OF A.S.T.M. DESIGNATION A-48 & AASHTO M 306-10.

Norwood Foundry
LIMITED
SINCE 1905

CATCH BASIN MANHOLE FRAME & GRATE

NF-38

EDM.
#8

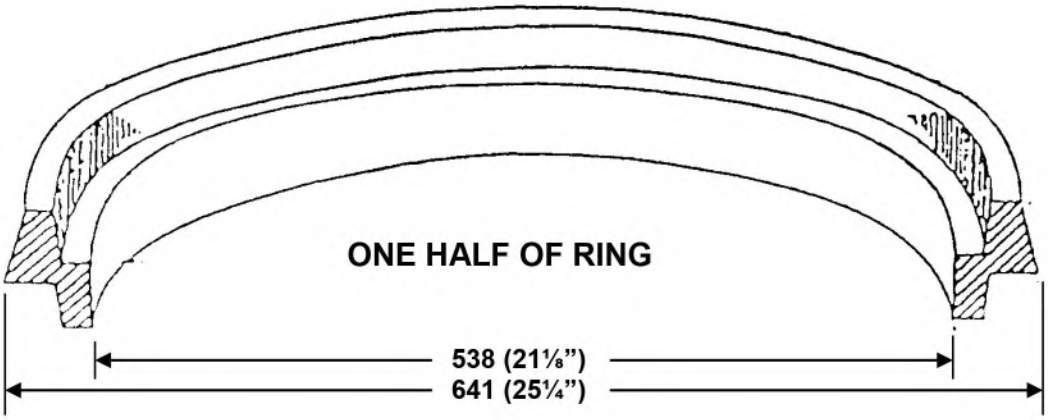

AVAILABLE FOR
38mm, 50mm, and 75mm
(1 1/2", 2" and 3")
ADJUSTMENTS

MANHOLE PAVING EXTENSION

FOR USE WITH THE NORWOOD NF-39 MANHOLE FRAME AND COVER, OR NF-39 CATCH BASIN FRAME AND GRATE.
A SIMPLE WAY TO RAISE THE ELEVATION OF A MANHOLE COVER WITHOUT DISTURBING THE MANHOLE BLOCKS.

SPECIFICATIONS:

THE CASTINGS SHALL BE TRUE TO PATTERN AND FREE FROM CRACKS, GAS HOLES, FLAWS AND EXCESSIVE SHRINKAGE. SURFACES OF THE CASTINGS SHALL BE FREE FROM BURNT ON SAND AND SHALL BE REASONABLY SMOOTH. RUNNERS, RISERS, FINS AND OTHER CAST ON PIECES SHALL BE REMOVED. IN OTHER RESPECT THE CASTINGS SHALL CONFORM TO WHATEVER POINTS MAY BE AGREED UPON BETWEEN THE MANUFACTURER AND THE ENGINEER. UPON REQUEST OF THE ENGINEER THE MANUFACTURER SHALL BE PREPARED TO CERTIFY THAT HIS PRODUCT CONFORMS TO THE REQUIREMENTS OF A.S.T.M. DESIGNATION A-48 & AASHTO M 306-10.

Norwood Foundry LIMITED
SINCE 1905

MANHOLE PAVING EXTENSION

NF-39

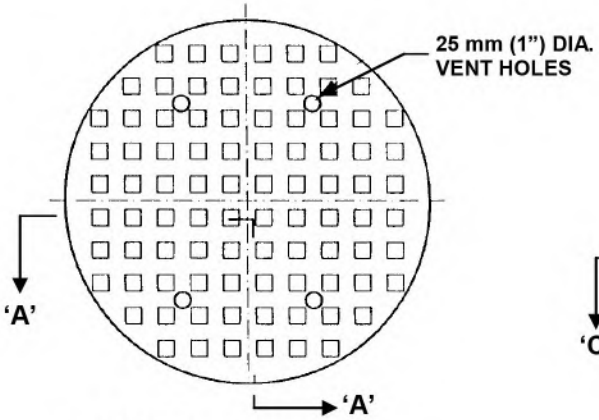

COVER - TOP VIEW

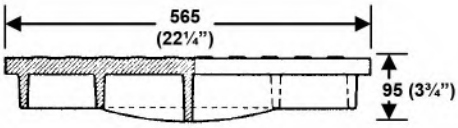

SECTION 'A-A'

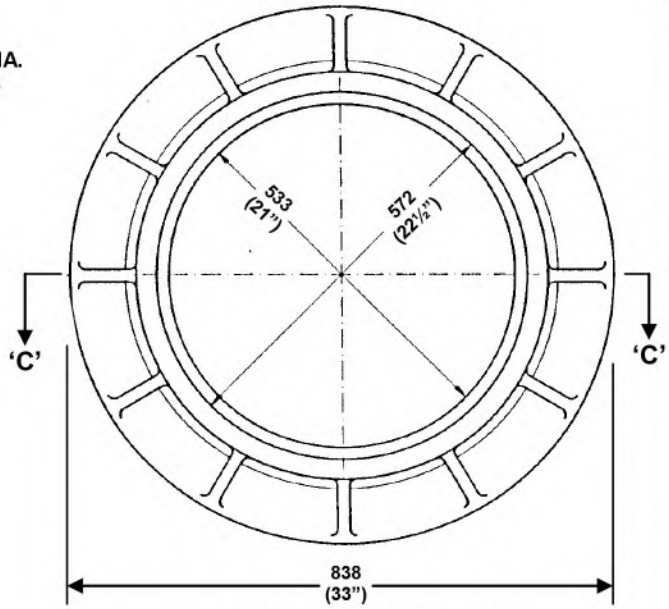

FRAME - TOP VIEW

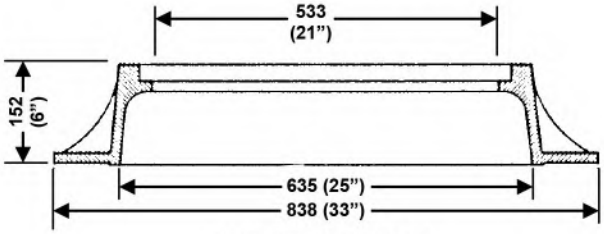

SECTION 'C-C'

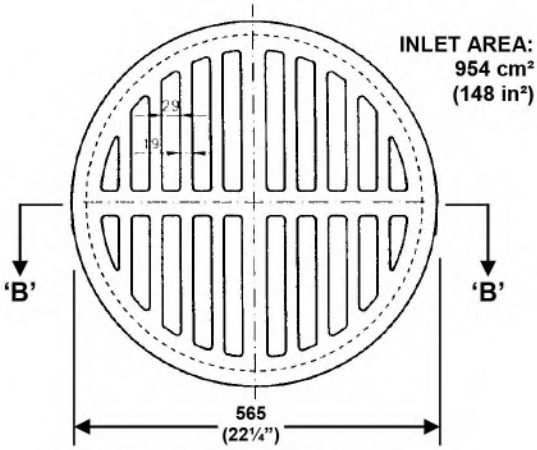

GRATE - TOP VIEW

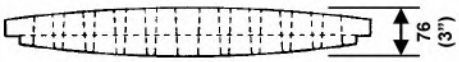

SECTION 'B-B'

DEPTH OF PONDING (cm)	CAPACITY (L/s)
2.54	40.4
5.08	57.2
7.62	70.0
10.16	80.9
12.70	90.4
15.24	99.1
17.78	107.0
20.32	114.4
22.86	121.3
25.40	127.9

CAN BE MODIFIED FOR SECURITY (LID BOLTED DOWN) OR GASTITE (GASKETED) APPLICATIONS

Custom Covers also available.

SPECIFICATIONS:

THE CASTINGS SHALL BE TRUE TO PATTERN AND FREE FROM CRACKS, GAS HOLES, FLAWS AND EXCESSIVE SHRINKAGE. SURFACES OF THE CASTINGS SHALL BE FREE FROM BURNT ON SAND AND SHALL BE REASONABLY SMOOTH. RUNNERS, RISERS, FINS AND OTHER CAST ON PIECES SHALL BE REMOVED. IN OTHER RESPECT THE CASTINGS SHALL CONFORM TO WHATEVER POINTS MAY BE AGREED UPON BETWEEN THE MANUFACTURER AND THE ENGINEER. UPON REQUEST OF THE ENGINEER THE MANUFACTURER SHALL BE PREPARED TO CERTIFY THAT HIS PRODUCT CONFORMS TO THE REQUIREMENTS OF A.S.T.M. DESIGNATION A-48 & AASHTO M 306-10.

Norwood Foundry LIMITED

SINCE 1905

STANDARD MANHOLE & ROUND TOP CATCH BASIN FRAME & COVER

NF-39

EDM. #6

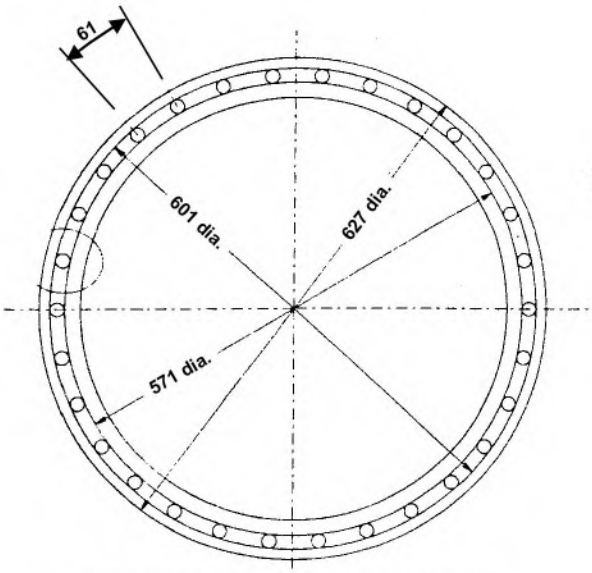

SECTION 'A-A' - TOP VIEW

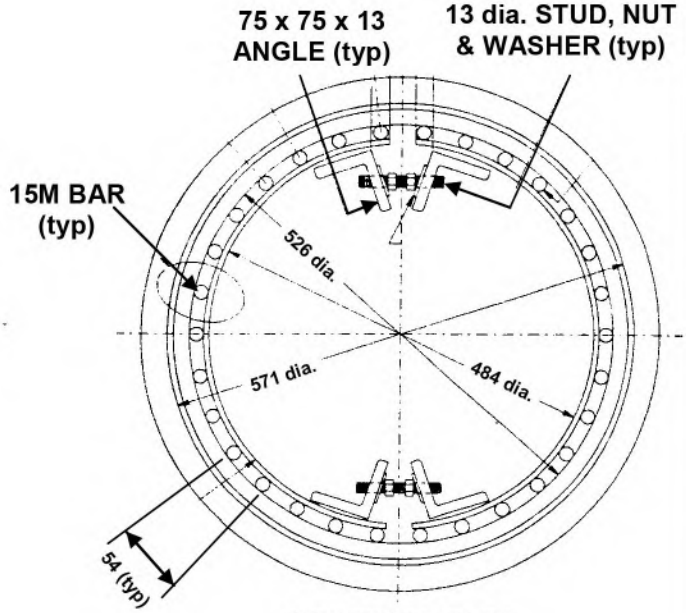

SECTION 'B-B'

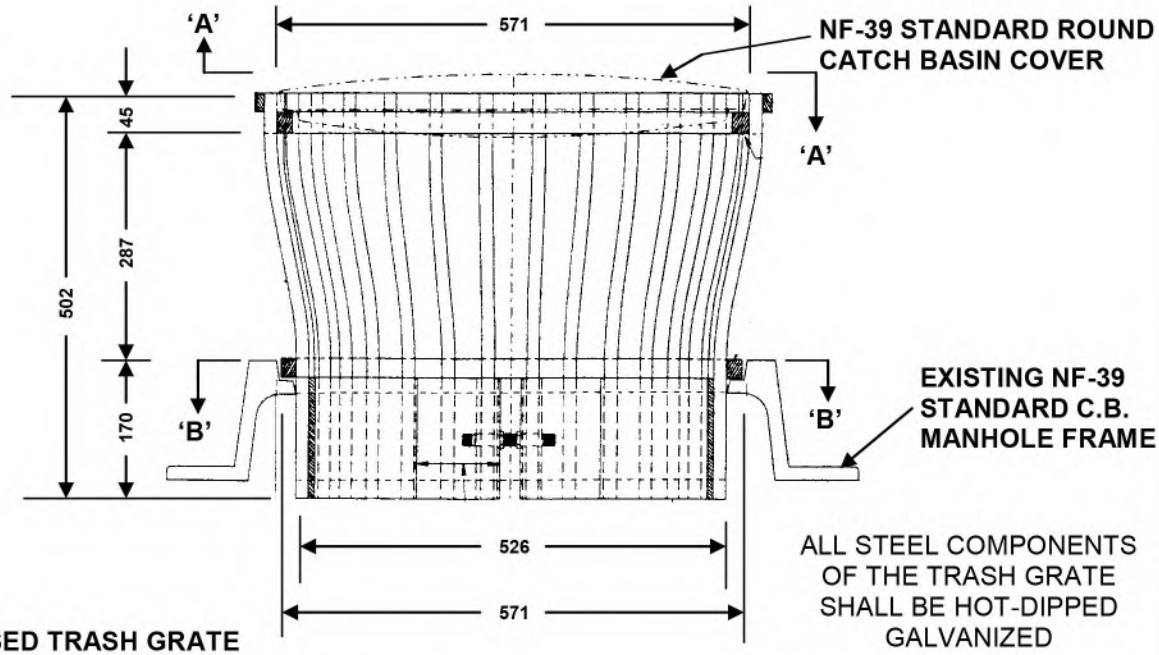

ALL STEEL COMPONENTS OF THE TRASH GRATE SHALL BE HOT-DIPPED GALVANIZED

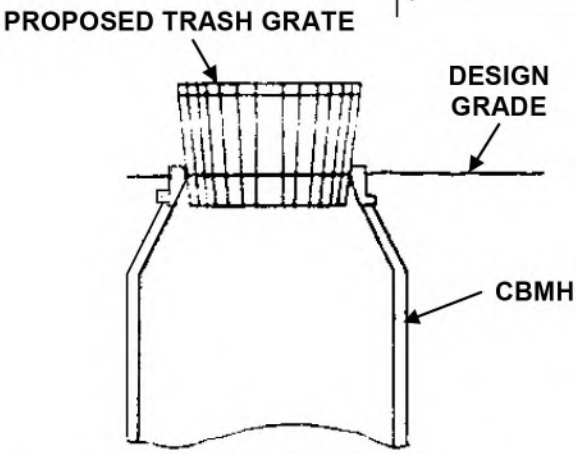

TRASH GRATE POSITIONING

Norwood Foundry
LIMITED
SINCE 1905

SHORT TRASH GRATE

NF-39

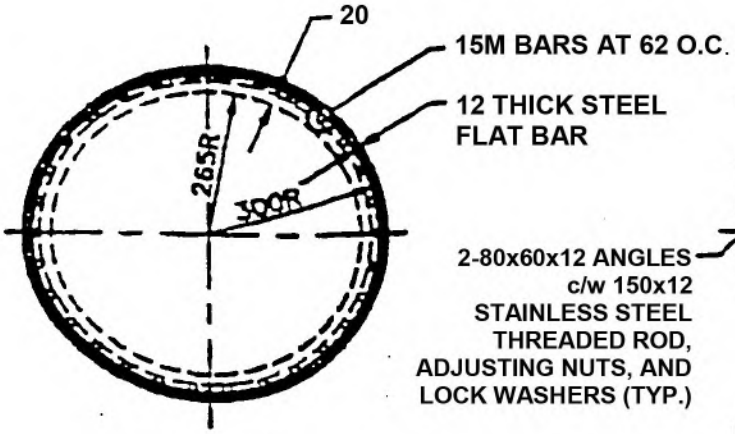

TOP VIEW

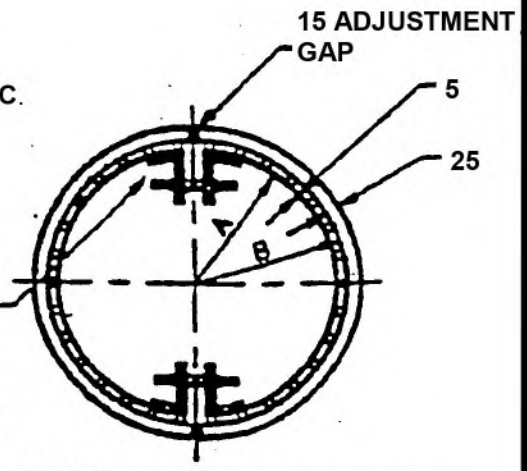

NOTE:
DIMENSIONS A AND B ARE TO BE ADJUSTED TO FIT SNUGLY INSIDE AN NF-39 MANHOLE FRAME

SECTION 'A-A'

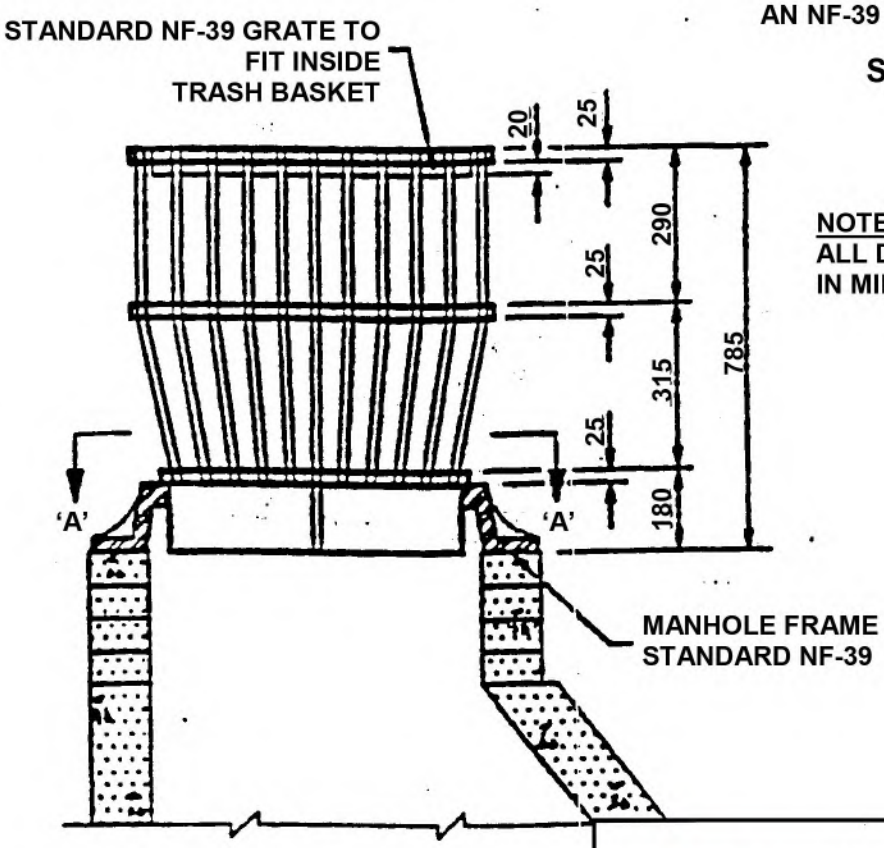

NOTE:
ALL DIMENSIONS ARE IN MILLIMETERS

ALL STEEL COMPONENTS OF THE TRASH GRATE SHALL BE HOT-DIPPED GALVANIZED

Norwood Foundry LIMITED
SINCE 1905

LARGE TRASH GRATE

NF-39

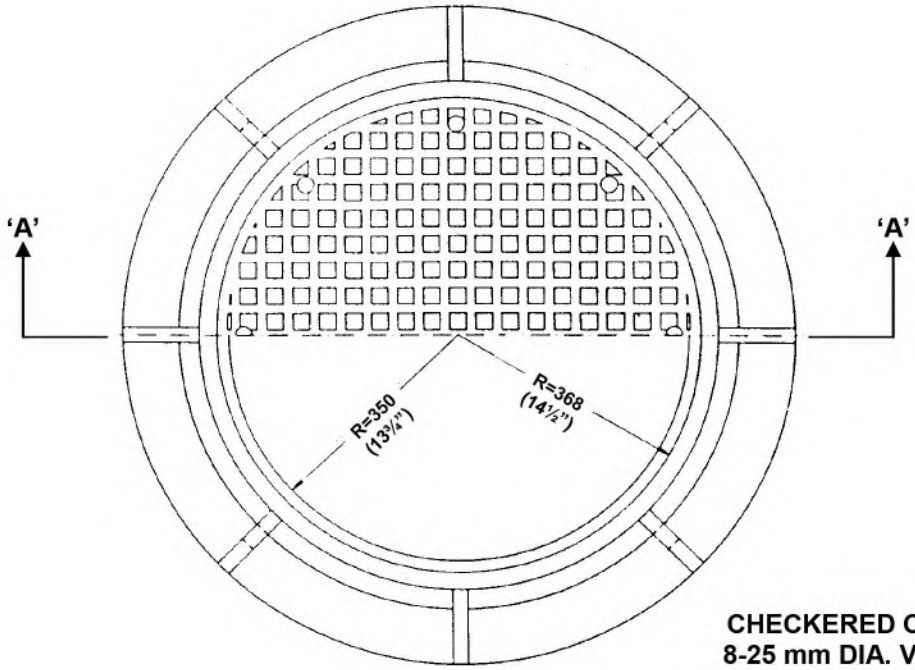

TOP VIEW

CHECKERED COVER WITH 8-25 mm DIA. VENT HOLES. NF-40 LID CAN BE MARKED "TELEPHONE" OR "E.D.S." (ELECTRICAL DIST. SYSTEM)

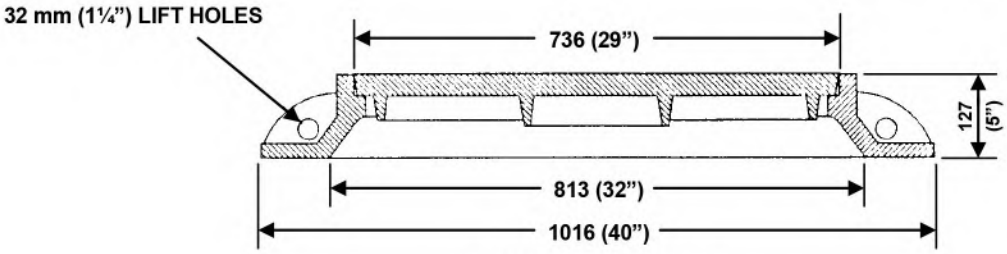

SECTION 'A-A'

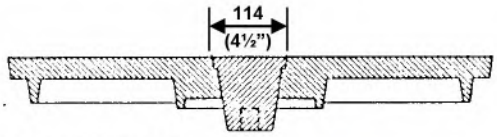

VALVE CHAMBER COVER AND PLUG

SPECIFICATIONS:

THE CASTINGS SHALL BE TRUE TO PATTERN AND FREE FROM CRACKS, GAS HOLES, FLAWS AND EXCESSIVE SHRINKAGE. SURFACES OF THE CASTINGS SHALL BE FREE FROM BURNT ON SAND AND SHALL BE REASONABLY SMOOTH. RUNNERS, RISERS, FINS AND OTHER CAST ON PIECES SHALL BE REMOVED. IN OTHER RESPECT THE CASTINGS SHALL CONFORM TO WHATEVER POINTS MAY BE AGREED UPON BETWEEN THE MANUFACTURER AND THE ENGINEER. UPON REQUEST OF THE ENGINEER THE MANUFACTURER SHALL BE PREPARED TO CERTIFY THAT HIS PRODUCT CONFORMS TO THE REQUIREMENTS OF A.S.T.M. DESIGNATION A-48.

Norwood Foundry LIMITED
SINCE 1905

736 mm (29") MANHOLE FRAME & COVER

NF-40

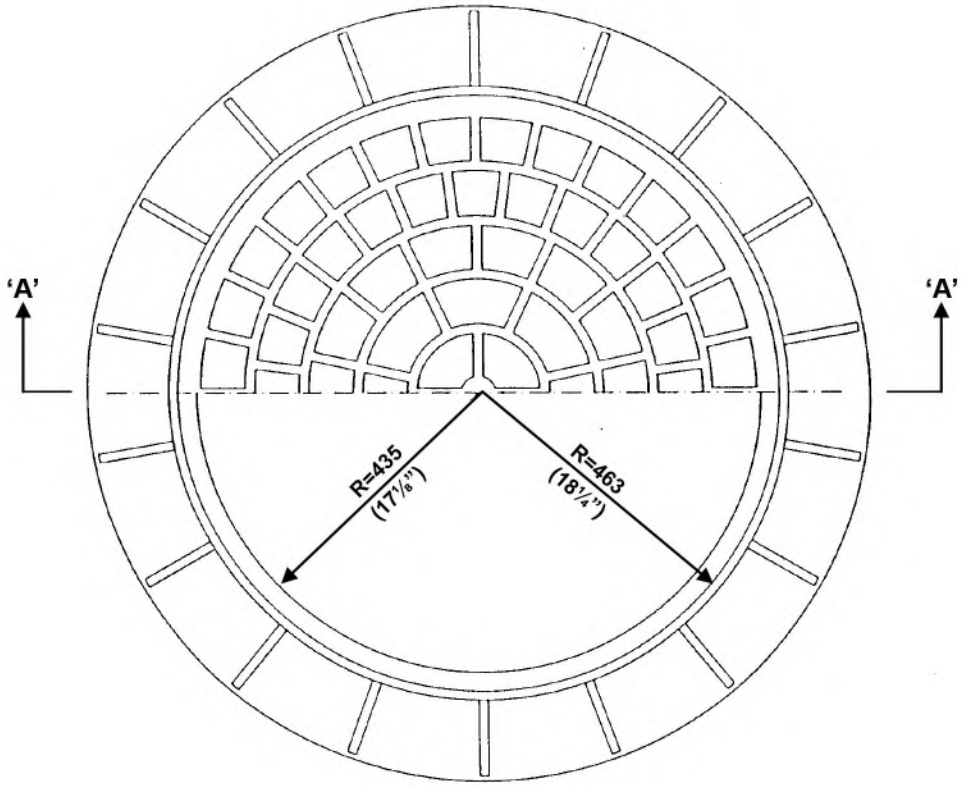

TOP VIEW

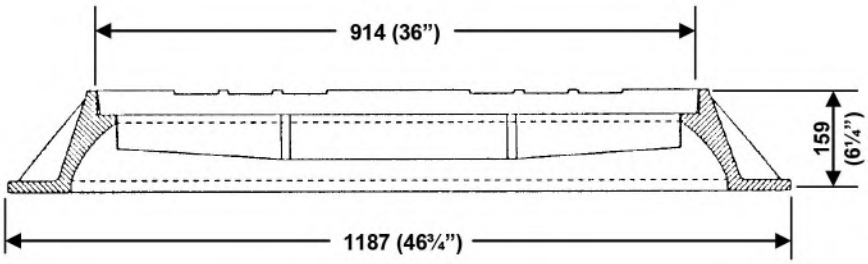

SECTION 'A-A'

SPECIFICATIONS:

THE CASTINGS SHALL BE TRUE TO PATTERN AND FREE FROM CRACKS, GAS HOLES, FLAWS AND EXCESSIVE SHRINKAGE. SURFACES OF THE CASTINGS SHALL BE FREE FROM BURNT ON SAND AND SHALL BE REASONABLY SMOOTH. RUNNERS, RISERS, FINS AND OTHER CAST ON PIECES SHALL BE REMOVED. IN OTHER RESPECT THE CASTINGS SHALL CONFORM TO WHATEVER POINTS MAY BE AGREED UPON BETWEEN THE MANUFACTURER AND THE ENGINEER. UPON REQUEST OF THE ENGINEER THE MANUFACTURER SHALL BE PREPARED TO CERTIFY THAT HIS PRODUCT CONFORMS TO THE REQUIREMENTS OF A.S.T.M. DESIGNATION A-48.

Norwood Foundry LIMITED

SINCE 1905

914 mm (36") MANHOLE FRAME & COVER

NF-41

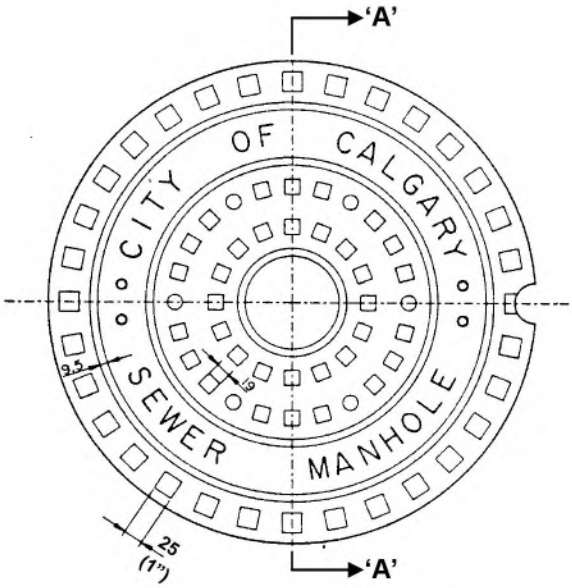

COVER - TOP VIEW

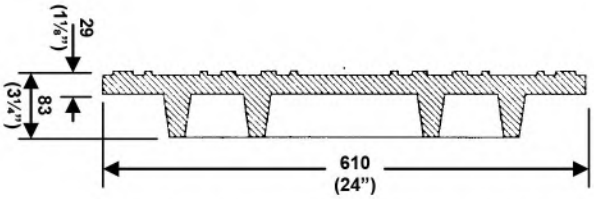

COVER - SECTION 'A-A'

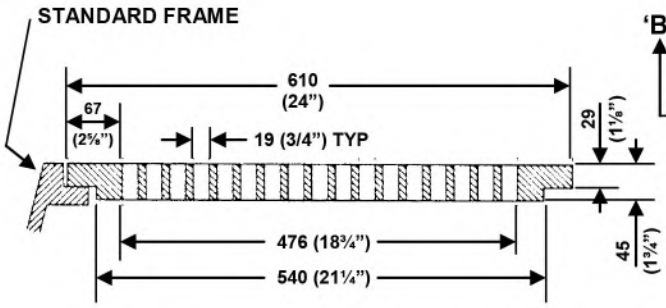

GRATE - SECTION 'B-B'

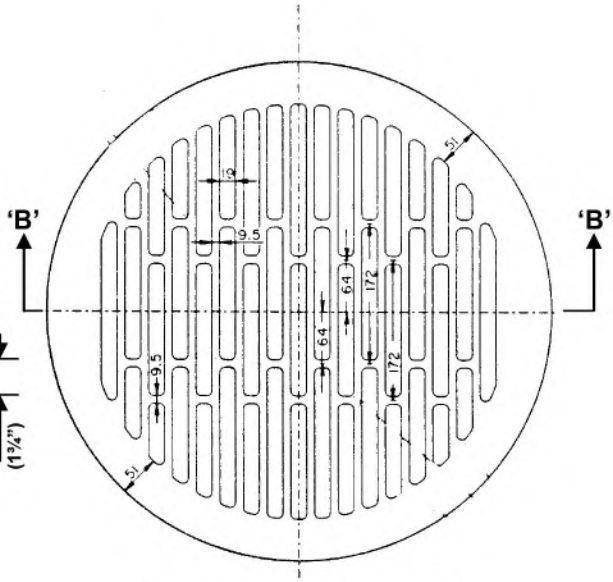

GRATE - TOP VIEW

SPECIFICATIONS:

THE CASTINGS SHALL BE TRUE TO PATTERN AND FREE FROM CRACKS, GAS HOLES, FLAWS AND EXCESSIVE SHRINKAGE. SURFACES OF THE CASTINGS SHALL BE FREE FROM BURNT ON SAND AND SHALL BE REASONABLY SMOOTH. RUNNERS, RISERS, FINS AND OTHER CAST ON PIECES SHALL BE REMOVED. IN OTHER RESPECT THE CASTINGS SHALL CONFORM TO WHATEVER POINTS MAY BE AGREED UPON BETWEEN THE MANUFACTURER AND THE ENGINEER. UPON REQUEST OF THE ENGINEER THE MANUFACTURER SHALL BE PREPARED TO CERTIFY THAT HIS PRODUCT CONFORMS TO THE REQUIREMENTS OF A.S.T.M. DESIGNATION A-48.

Norwood Foundry LIMITED

SINCE 1905

MANHOLE COVER & CATCH BASIN GRATE

NF-49

AVAILABLE IN
102mm, 152mm and 257mm
(4", 6" & 10") FRAME HEIGHTS

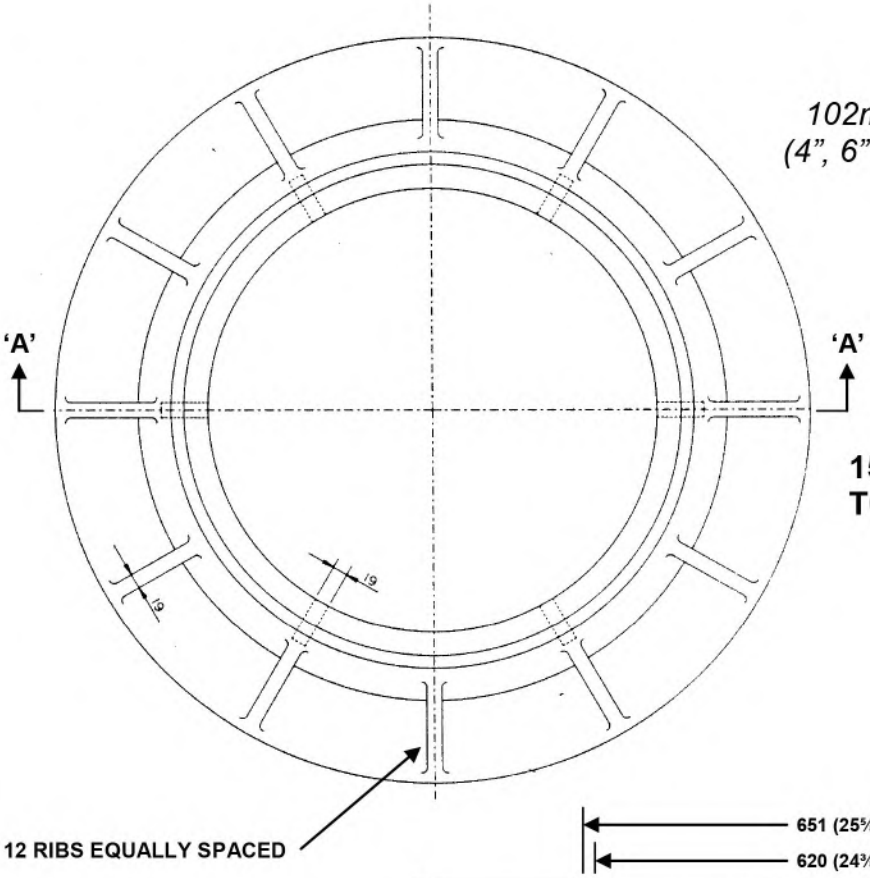

152 (6") FRAME
TOP VIEW

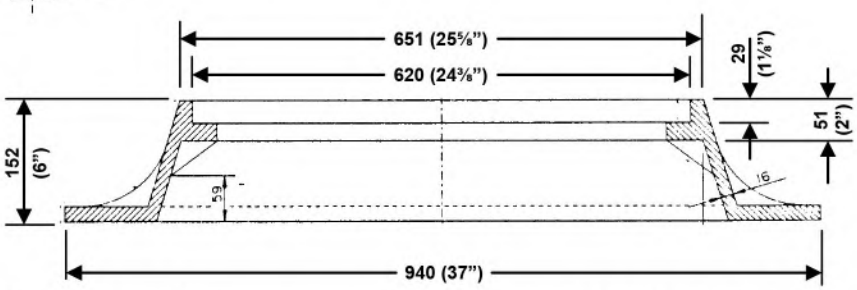

152 (6") FRAME
SECTION 'A-A'

102 (4") FRAME
ALSO AVAILABLE

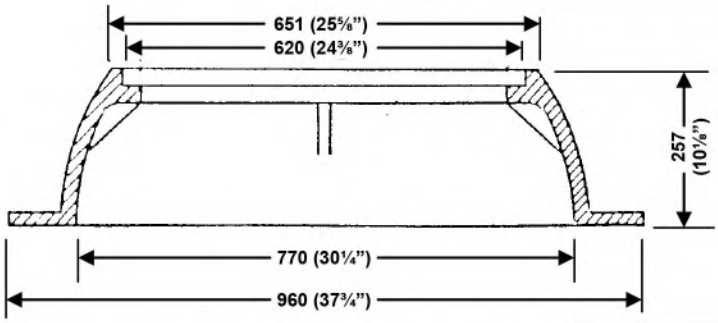

257 (10") FRAME - CROSS SECTION

SPECIFICATIONS:

THE CASTINGS SHALL BE TRUE TO PATTERN AND FREE FROM CRACKS, GAS HOLES, FLAWS AND EXCESSIVE SHRINKAGE. SURFACES OF THE CASTINGS SHALL BE FREE FROM BURNT ON SAND AND SHALL BE REASONABLY SMOOTH. RUNNERS, RISERS, FINS AND OTHER CAST ON PIECES SHALL BE REMOVED. IN OTHER RESPECT THE CASTINGS SHALL CONFORM TO WHATEVER POINTS MAY BE AGREED UPON BETWEEN THE MANUFACTURER AND THE ENGINEER. UPON REQUEST OF THE ENGINEER THE MANUFACTURER SHALL BE PREPARED TO CERTIFY THAT HIS PRODUCT CONFORMS TO THE REQUIREMENTS OF A.S.T.M. DESIGNATION A-48.

Norwood Foundry
LIMITED
SINCE 1905

STANDARD & DEEP
MANHOLE FRAMES

NF-49

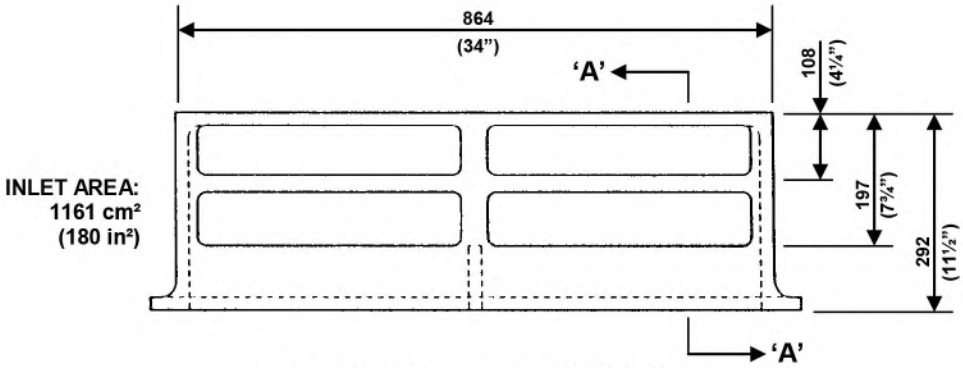

1pc SIDE INLET - FRONT VIEW

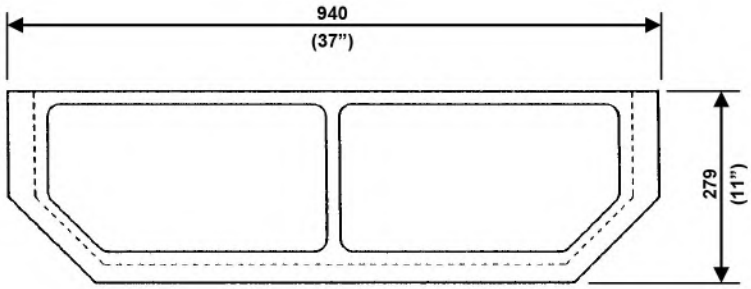

BOTTOM VIEW

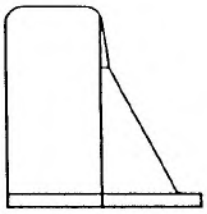

END VIEW

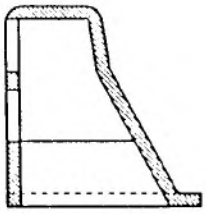

SECTION 'A-A'

CAPACITY COMBINED WITH GUTTER INLET

DEPTH OF PONDING (cm)	CAPACITY (L/s)
2.54	83.3
5.08	125.0
7.62	161.9
10.16	191.2
12.70	222.5
15.24	255.2
17.78	288.4
20.32	316.1
22.86	342.2
25.40	366.0

SPECIFICATIONS:

THE CASTINGS SHALL BE TRUE TO PATTERN AND FREE FROM CRACKS, GAS HOLES, FLAWS AND EXCESSIVE SHRINKAGE. SURFACES OF THE CASTINGS SHALL BE FREE FROM BURNT ON SAND AND SHALL BE REASONABLY SMOOTH. RUNNERS, RISERS, FINS AND OTHER CAST ON PIECES SHALL BE REMOVED. IN OTHER RESPECT THE CASTINGS SHALL CONFORM TO WHATEVER POINTS MAY BE AGREED UPON BETWEEN THE MANUFACTURER AND THE ENGINEER. UPON REQUEST OF THE ENGINEER THE MANUFACTURER SHALL BE PREPARED TO CERTIFY THAT HIS PRODUCT CONFORMS TO THE REQUIREMENTS OF A.S.T.M. DESIGNATION A-48 (CAST IRON) OR A.S.T.M. A-536 (DUCTILE IRON)

Norwood Foundry LIMITED
SINCE 1905

ONE PIECE SIDE INLET

NF-51

CGY. K-1

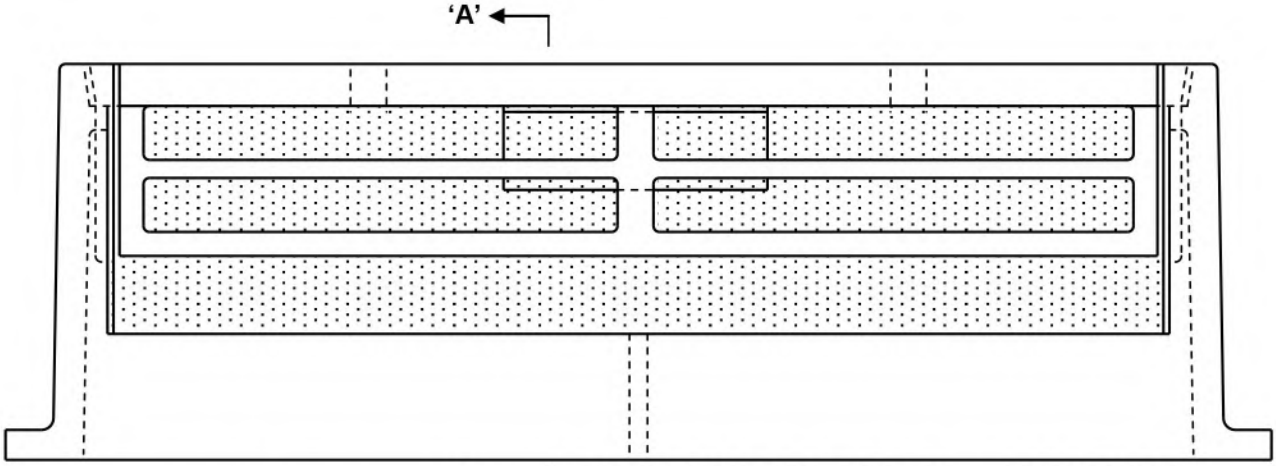

TWO PIECE SIDE INLET - ASSEMBLED
FRONT VIEW

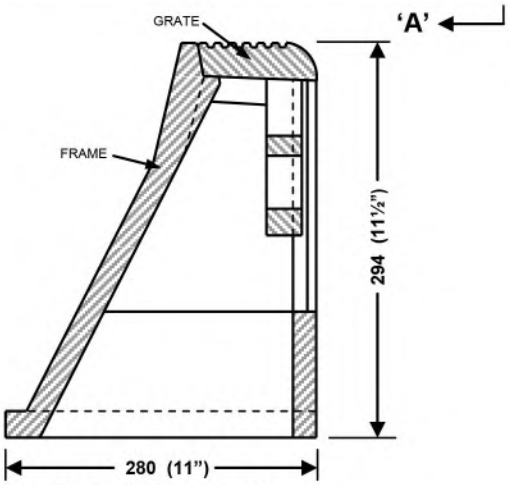

SECTION 'A-A'

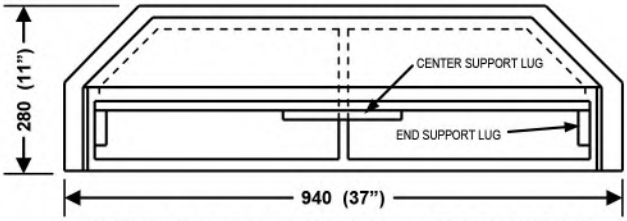

SIDE INLET FRAME - TOP VIEW

SIDE INLET GRATE - FRONT VIEW

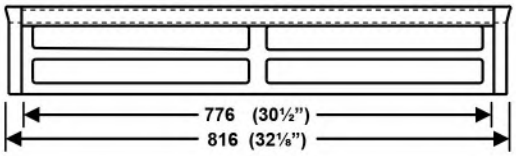

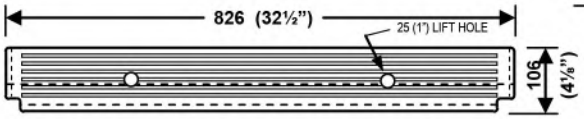

SIDE INLET GRATE - TOP VIEW

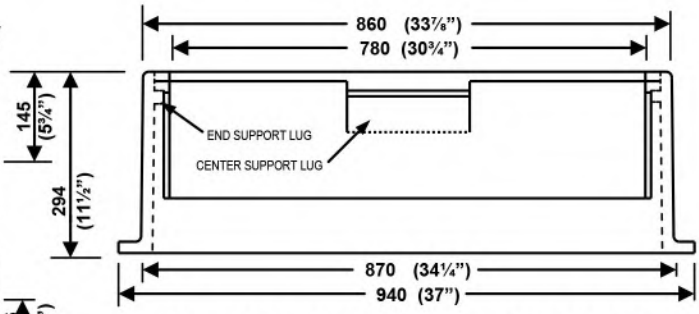

SIDE INLET FRAME - FRONT VIEW

SPECIFICATIONS:

THE CASTINGS SHALL BE TRUE TO PATTERN AND FREE FROM CRACKS, GAS HOLES, FLAWS AND EXCESSIVE SHRINKAGE. SURFACES OF THE CASTINGS SHALL BE FREE FROM BURNT ON SAND AND SHALL BE REASONABLY SMOOTH. RUNNERS, RISERS, FINS AND OTHER CAST ON PIECES SHALL BE REMOVED. IN OTHER RESPECT THE CASTINGS SHALL CONFORM TO WHATEVER POINTS MAY BE AGREED UPON BETWEEN THE MANUFACTURER AND THE ENGINEER. UPON REQUEST OF THE ENGINEER THE MANUFACTURER SHALL BE PREPARED TO CERTIFY THAT HIS PRODUCT CONFORMS TO THE REQUIREMENTS OF A.S.T.M. DESIGNATION A-48 (CAST IRON) OR A.S.T.M. A-536 (DUCTILE IRON) & AASHTO M 306-10.

Norwood Foundry
LIMITED
SINCE 1905

TWO PIECE SIDE INLET FRAME AND GRATE

FOR STRAIGHT FACE CURBS ON 900mm CATCH BASINS

NF-51

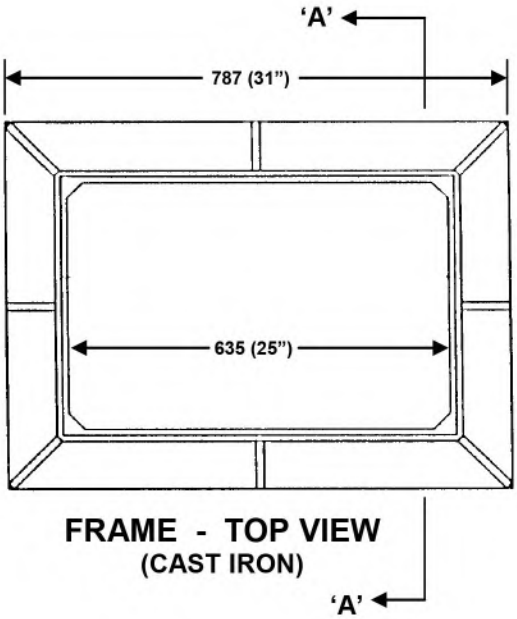

FRAME - TOP VIEW
(CAST IRON)

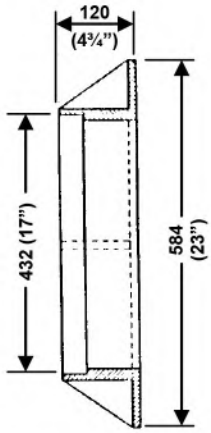

SECTION 'A-A'

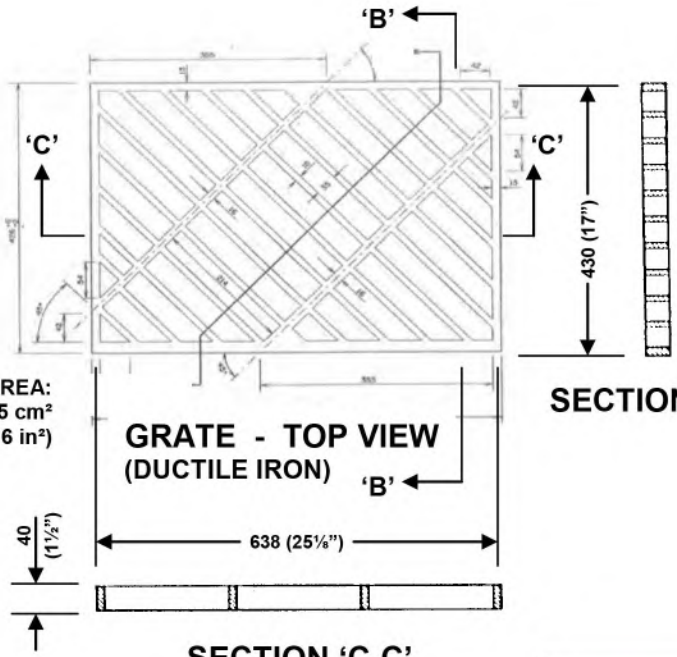

INLET AREA:
1845 cm²
(286 in²)

GRATE - TOP VIEW
(DUCTILE IRON)

SECTION 'B-B'

SECTION 'C-C'

CAPACITY COMBINED WITH CURB INLET

DEPTH OF PONDING (cm)	CAPACITY (L/s)
2.54	83.3
5.08	125.0
7.62	161.9
10.16	191.2
12.70	222.5
15.24	255.2
17.78	288.4
20.32	316.1
22.86	342.2
25.40	366.0

SPECIFICATIONS:

THE CASTINGS SHALL BE TRUE TO PATTERN AND FREE FROM CRACKS, GAS HOLES, FLAWS AND EXCESSIVE SHRINKAGE. SURFACES OF THE CASTINGS SHALL BE FREE FROM BURNT ON SAND AND SHALL BE REASONABLY SMOOTH. RUNNERS, RISERS, FINS AND OTHER CAST ON PIECES SHALL BE REMOVED. IN OTHER RESPECT THE CASTINGS SHALL CONFORM TO WHATEVER POINTS MAY BE AGREED UPON BETWEEN THE MANUFACTURER AND THE ENGINEER. UPON REQUEST OF THE ENGINEER THE MANUFACTURER SHALL BE PREPARED TO CERTIFY THAT HIS PRODUCT CONFORMS TO THE REQUIREMENTS OF A.S.T.M. DESIGNATION A-48 (CAST IRON) OR A.S.T.M. A-536 (DUCTILE IRON) AASHTO M 306-10.

Norwood Foundry
LIMITED
SINCE 1905

GUTTER CATCH BASIN
FRAME & GRATE

NF-51

CGY.
K-3

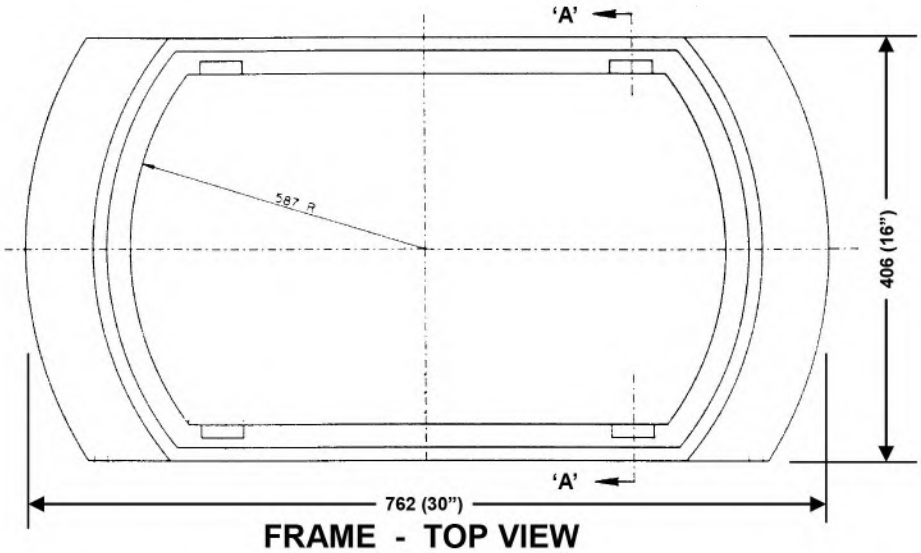

FRAME - TOP VIEW

THIS GRATE IS ALSO AVAILABLE IN RIGHT HAND

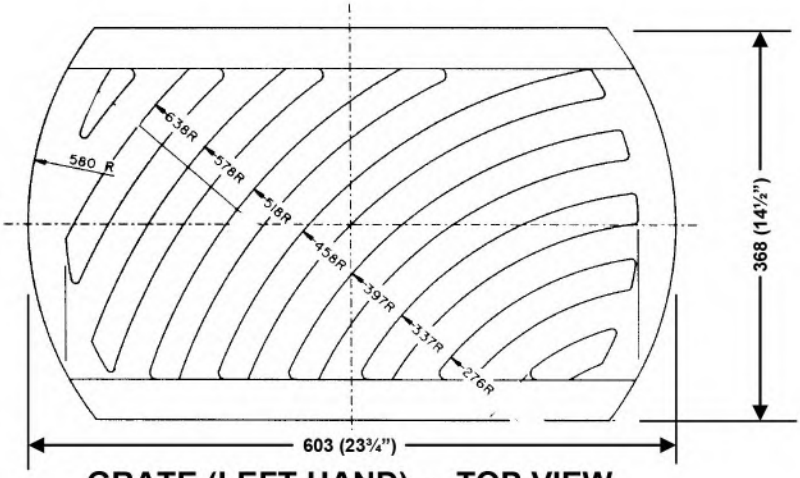

GRATE (LEFT HAND) - TOP VIEW

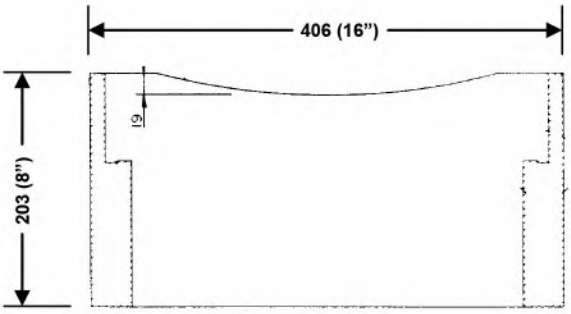

FRAME - SECTION 'A-A'

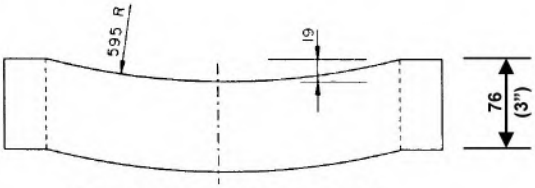

GRATE - END VIEW

SPECIFICATIONS:

THE CASTINGS SHALL BE TRUE TO PATTERN AND FREE FROM CRACKS, GAS HOLES, FLAWS AND EXCESSIVE SHRINKAGE. SURFACES OF THE CASTINGS SHALL BE FREE FROM BURNT ON SAND AND SHALL BE REASONABLY SMOOTH. RUNNERS, RISERS, FINS AND OTHER CAST ON PIECES SHALL BE REMOVED. IN OTHER RESPECT THE CASTINGS SHALL CONFORM TO WHATEVER POINTS MAY BE AGREED UPON BETWEEN THE MANUFACTURER AND THE ENGINEER. UPON REQUEST OF THE ENGINEER THE MANUFACTURER SHALL BE PREPARED TO CERTIFY THAT HIS PRODUCT CONFORMS TO THE REQUIREMENTS OF A.S.T.M. DESIGNATION A-48.

Norwood Foundry LIMITED

SINCE 1905

CATCH BASIN FRAME & GRATE

NF-60

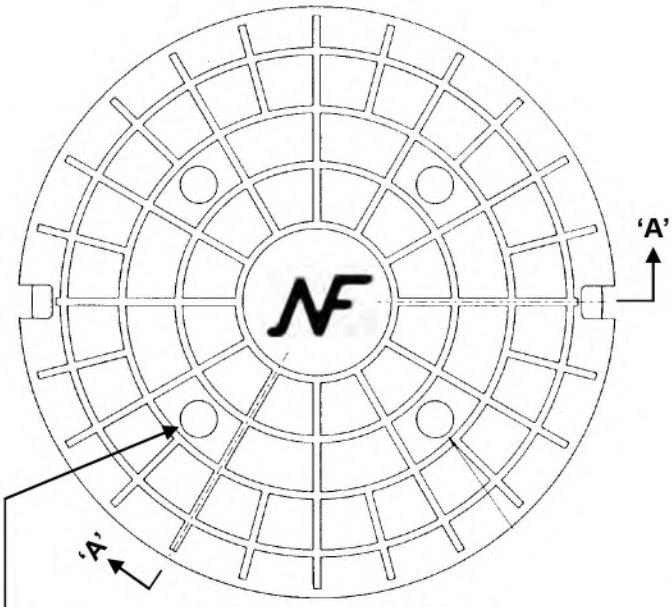

COVER - TOP VIEW

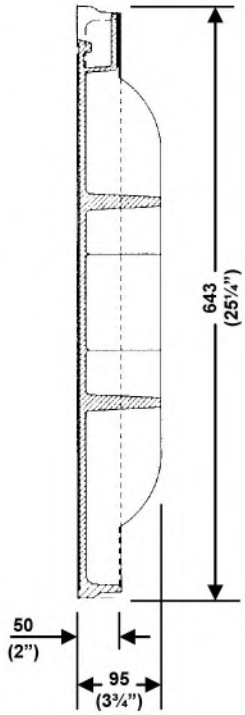

SECTION 'A-A'

FOUR 20mm (3/4") VENT HOLES STANDARD

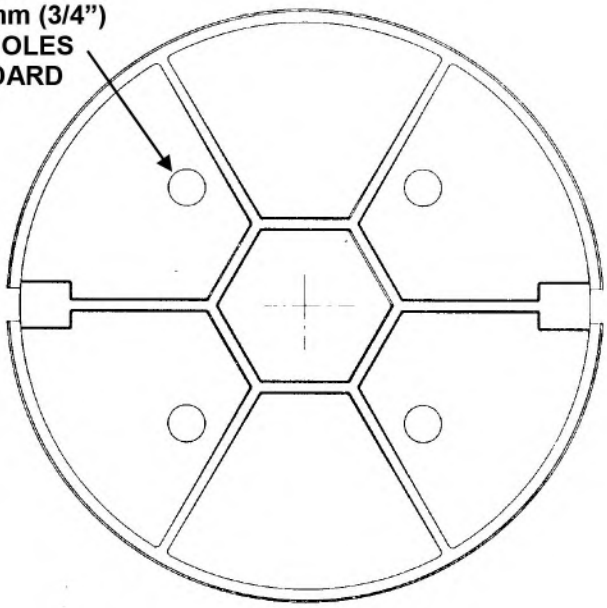

COVER - BOTTOM VIEW

MATERIAL SPECIFICATIONS:
DUCTILE IRON GRADE 80-60-03, BEARING SURFACE SHALL BE MACHINED TO PREVENT ROCKING

SPECIFICATIONS:

THE CASTINGS SHALL BE TRUE TO PATTERN AND FREE FROM CRACKS, GAS HOLES, FLAWS AND EXCESSIVE SHRINKAGE. SURFACES OF THE CASTINGS SHALL BE FREE FROM BURNT ON SAND AND SHALL BE REASONABLY SMOOTH. RUNNERS, RISERS, FINS AND OTHER CAST ON PIECES SHALL BE REMOVED. IN OTHER RESPECT THE CASTINGS SHALL CONFORM TO WHATEVER POINTS MAY BE AGREED UPON BETWEEN THE MANUFACTURER AND THE ENGINEER. UPON REQUEST OF THE ENGINEER THE MANUFACTURER SHALL BE PREPARED TO CERTIFY THAT HIS PRODUCT CONFORMS TO THE REQUIREMENTS OF A.S.T.M. DESIGNATION A-536 & AASHTO M 306-10.

Norwood Foundry LIMITED
SINCE 1905

FLOATING FRAME TYPE MANHOLE COVER

NF-80

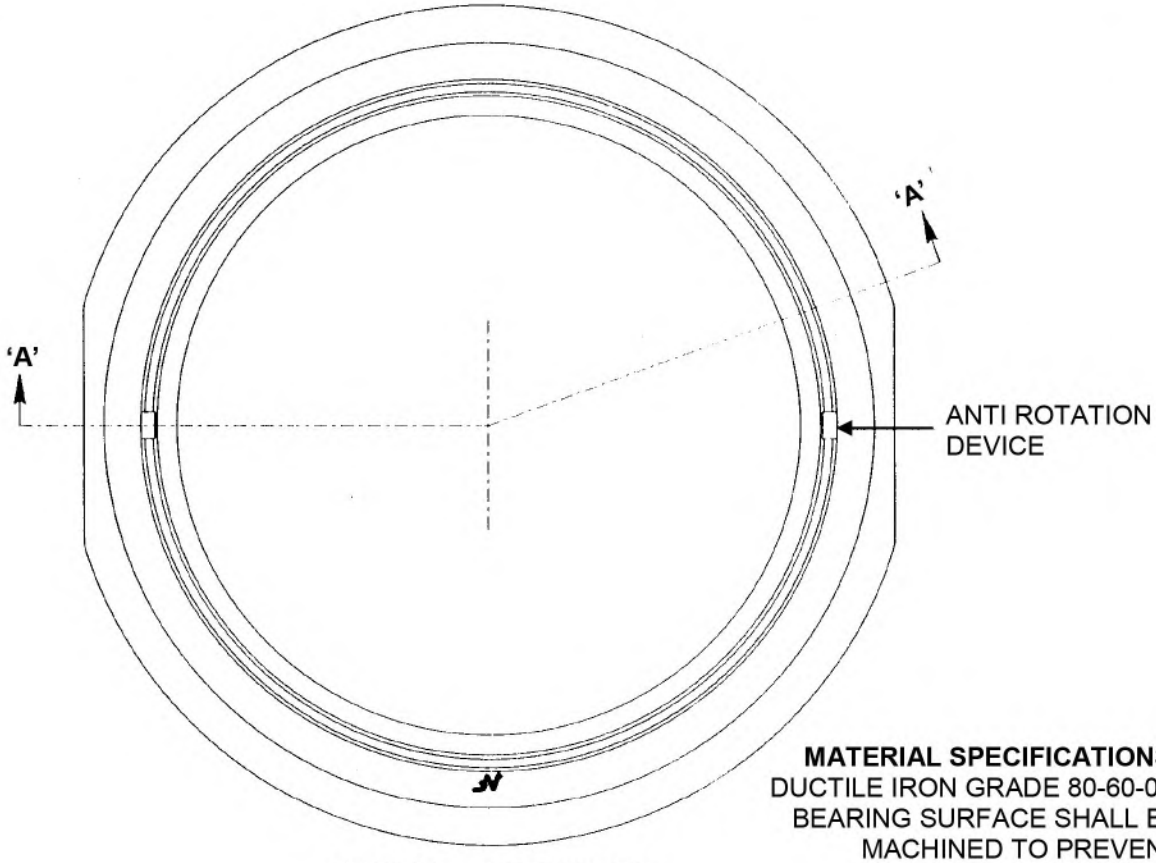

MATERIAL SPECIFICATIONS:
DUCTILE IRON GRADE 80-60-03, BEARING SURFACE SHALL BE MACHINED TO PREVENT ROCKING

FRAME - TOP VIEW

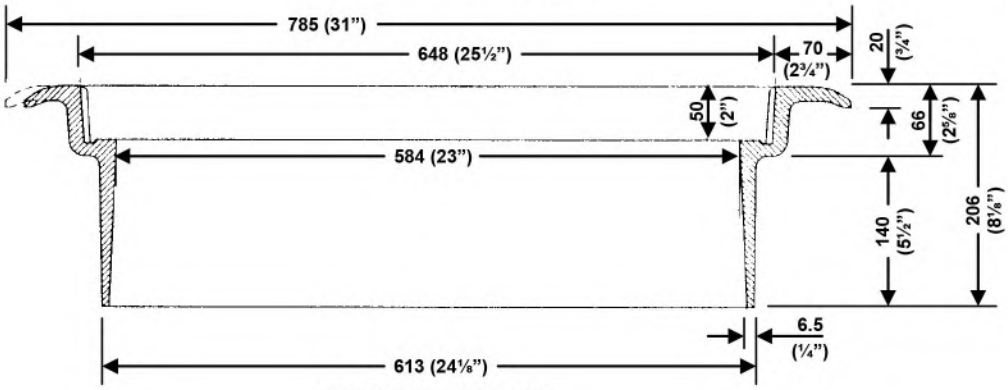

SECTION 'A-A'

SPECIFICATIONS:

THE CASTINGS SHALL BE TRUE TO PATTERN AND FREE FROM CRACKS, GAS HOLES, FLAWS AND EXCESSIVE SHRINKAGE. SURFACES OF THE CASTINGS SHALL BE FREE FROM BURNT ON SAND AND SHALL BE
REASONABLY SMOOTH. RUNNERS, RISERS, FINS AND OTHER CAST ON PIECES SHALL BE REMOVED. IN OTHER RESPECT THE CASTINGS SHALL CONFORM TO WHATEVER POINTS MAY BE AGREED UPON BETWEEN THE MANUFACTURER AND THE ENGINEER. UPON REQUEST OF THE ENGINEER THE MANUFACTURER SHALL BE PREPARED TO CERTIFY THAT HIS PRODUCT CONFORMS TO THE REQUIREMENTS OF A.S.T.M. DESIGNATION A-536 & AASHTO M 306-10.

Norwood Foundry LIMITED
SINCE 1905

FLOATING TYPE MANHOLE FRAME

NF-80

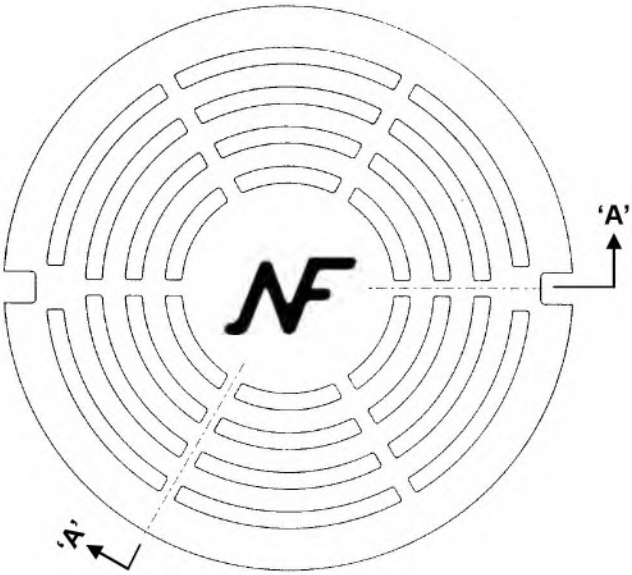

GRATE - TOP VIEW

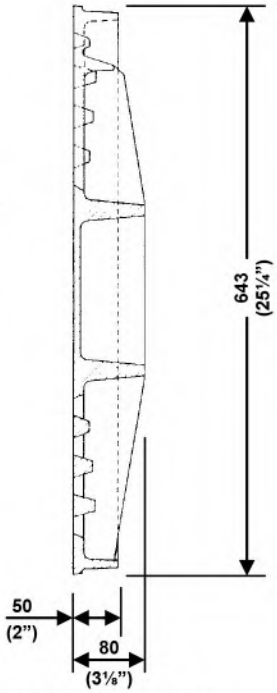

SECTION 'A-A'

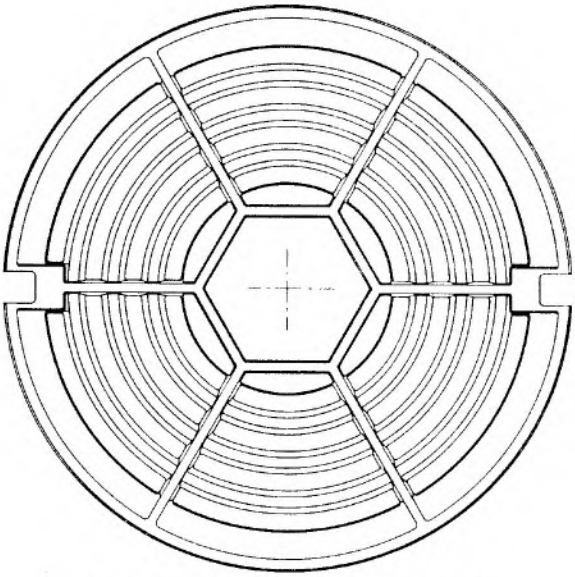

GRATE - BOTTOM VIEW

MATERIAL SPECIFICATIONS:
DUCTILE IRON GRADE 80-60-03, BEARING SURFACE SHALL BE MACHINED TO PREVENT ROCKING

SPECIFICATIONS:

THE CASTINGS SHALL BE TRUE TO PATTERN AND FREE FROM CRACKS, GAS HOLES, FLAWS AND EXCESSIVE SHRINKAGE. SURFACES OF THE CASTINGS SHALL BE FREE FROM BURNT ON SAND AND SHALL BE REASONABLY SMOOTH. RUNNERS, RISERS, FINS AND OTHER CAST ON PIECES SHALL BE REMOVED. IN OTHER RESPECT THE CASTINGS SHALL CONFORM TO WHATEVER POINTS MAY BE AGREED UPON BETWEEN THE MANUFACTURER AND THE ENGINEER. UPON REQUEST OF THE ENGINEER THE MANUFACTURER SHALL BE PREPARED TO CERTIFY THAT HIS PRODUCT CONFORMS TO THE REQUIREMENTS OF A.S.T.M. DESIGNATION A-536 & AASHTO M 306-10.

Norwood Foundry LIMITED
SINCE 1905

FLOATING FRAME TYPE CATCH BASIN MANHOLE COVER

NF-80

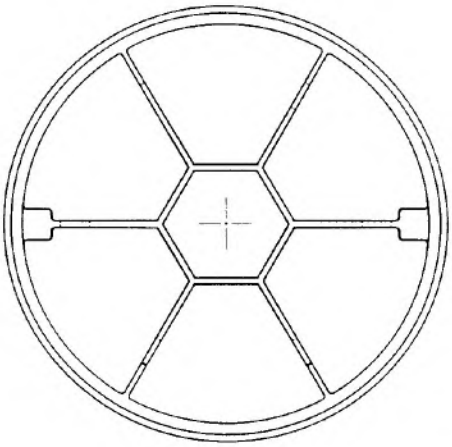

COVER - BOTTOM VIEW

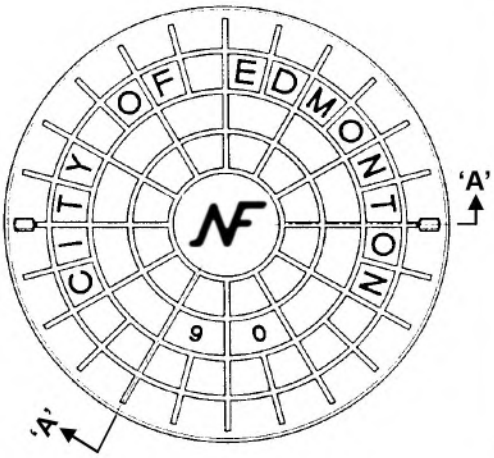

COVER - TOP VIEW

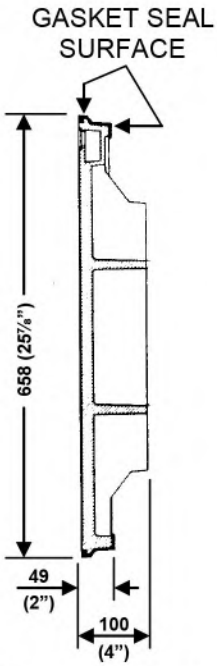

SECTION 'A-A'

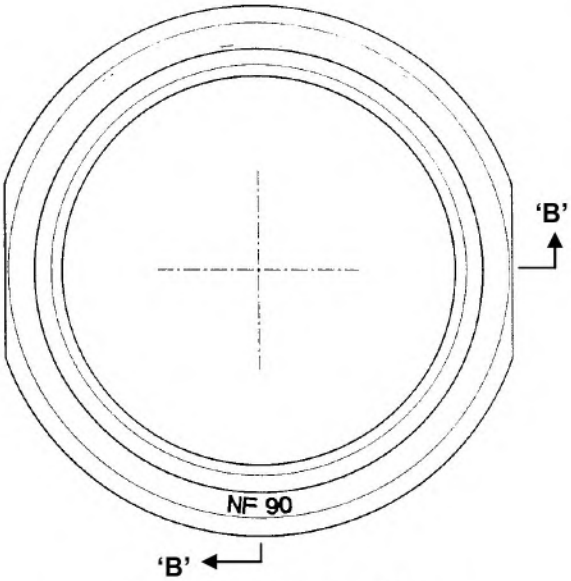

FRAME - TOP VIEW

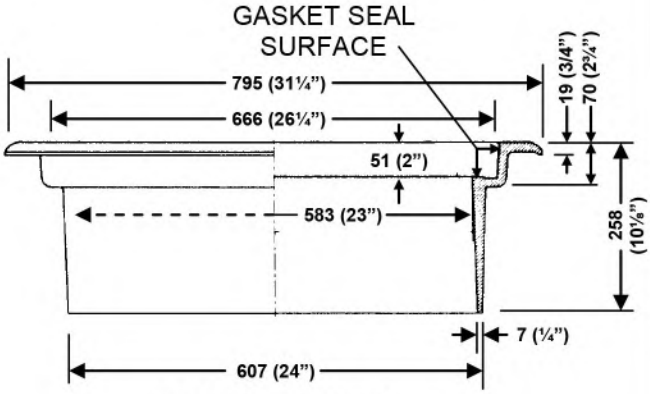

SECTION 'B-B'

MATERIAL SPECIFICATIONS:
DUCTILE IRON GRADE 80-60-03,
BEARING SURFACE SHALL BE
MACHINED TO PREVENT ROCKING

SPECIFICATIONS:

THE CASTINGS SHALL BE TRUE TO PATTERN AND FREE FROM CRACKS, GAS HOLES, FLAWS AND EXCESSIVE SHRINKAGE. SURFACES OF THE CASTINGS SHALL BE FREE FROM BURNT ON SAND AND SHALL BE REASONABLY SMOOTH. RUNNERS, RISERS, FINS AND OTHER CAST ON PIECES SHALL BE REMOVED. IN OTHER RESPECT THE CASTINGS SHALL CONFORM TO WHATEVER POINTS MAY BE AGREED UPON BETWEEN THE MANUFACTURER AND THE ENGINEER. UPON REQUEST OF THE ENGINEER THE MANUFACTURER SHALL BE PREPARED TO CERTIFY THAT HIS PRODUCT CONFORMS TO THE REQUIREMENTS OF A.S.T.M. DESIGNATION A-536. & AASHTO M 306-10.

Norwood Foundry LIMITED
SINCE 1905

FLOATING TYPE MANHOLE FRAME AND COVER WITH GASKET SEAL

NF-90

NF-80 FLOATING STYLE MANHOLE
INSTALLATION IN NEW ROADS

NOTE: FOR USE WITH 610mm NOM. (635mm MAX) I.D. GRADE RINGS

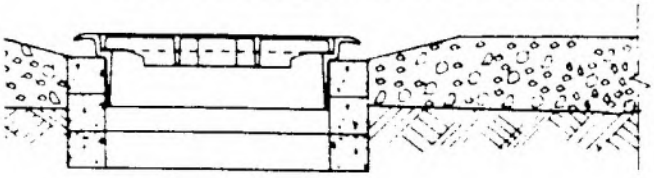

WHEN PREPARING TO PAVE REMOVE ALL GRAVEL AND DIRT FROM AROUND FRAME. DO NOT DRIVE ACROSS FRAME AND COVER WHEN IT RESTS ON CONCRETE RING.

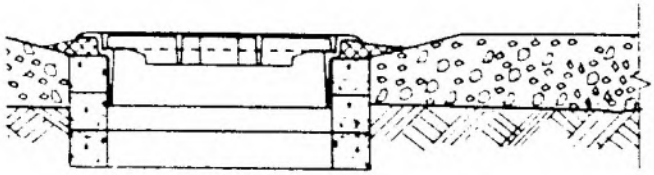

USE A FEW SHOVELS OF ASPHALT TO PACK UNDER THE FLANGE BEFORE PAVER DRIVES ACROSS. DO NOT LET ASPHALT GET COLD PRIOR TO ROLLING.

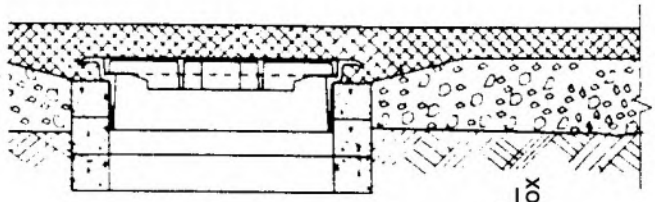

PRIOR TO APPLICATION OF ASPHALT, SPRAY THE FRAME AND COVER WITH OIL TO EASE REMOVAL OF ASPHALT. AFTER PAVER HAS LAID OUT ASPHALT REMOVE ALL ASPHALT FROM FRAME AND COVER.

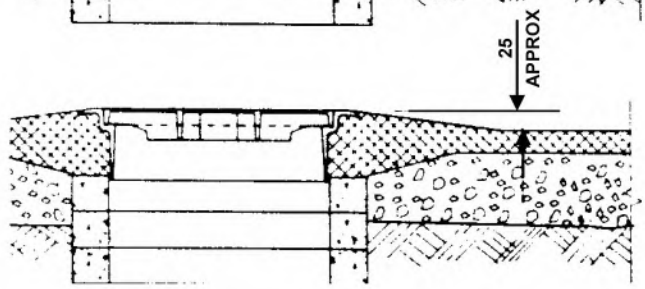

LIFT FRAME AND COVER AND USE THE ASPHALT THAT WAS REMOVED FROM IT TO PACK UNDER FLANGE AND FEATHER OUT TO APPROX. 50 cm FROM EDGE OF FRAME.

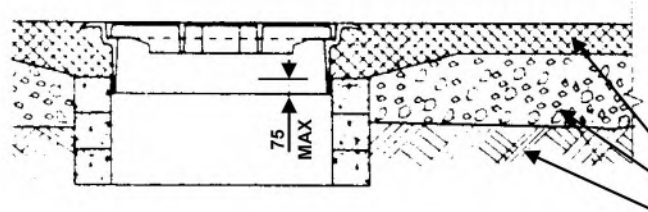

THE ROLLER CAN NOW PRESS FRAME AND COVER TO A SMOOTH INSTALLATION.

ASPHALTIC CONCRETE SURFACE COURSE

BASE COURSE

COMPACTED SUBGRADE

INSTALLATION IN EXISTING ROADS

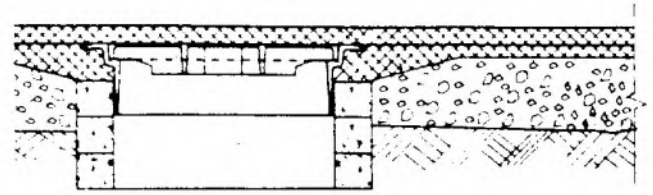

WHEN RESURFACING EXISTING ROADS, LOOSEN FRAME FROM ASPHALT. SPRAY FRAME AND COVER WITH OIL TO EASE REMOVAL OF NEW ASPHALT. AFTER PAVER HAS LAID OUT ASPHALT, REMOVE ALL ASPHALT FROM THE FRAME AND COVER.

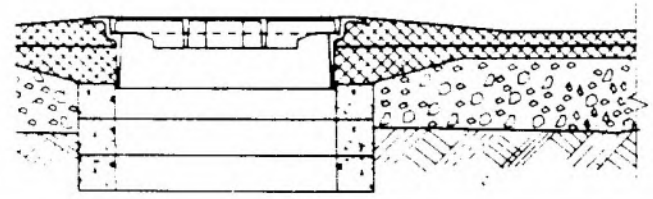

LIFT THE FRAME AND COVER AND USE ASPHALT THAT WAS REMOVED TO PACK UNDER FLANGE AND FEATHER OUT TO APPROX. 50 cm FROM EDGE OF FRAME. THE ROLLER CAN PRESS FRAME AND COVER AS IN NEW INSTALLATION.

1 DURING CONSTRUCTION AND IN GRAVEL ROADS THE NF-80 FRAME WILL FLOAT IN THE ROAD MATERIALS.

2 WHEN THE ROAD IS PAVED, THE GRAVEL IS REMOVED SO THAT THE ASPHALT COMES IN CONTACT WITH THE MANHOLE RING.

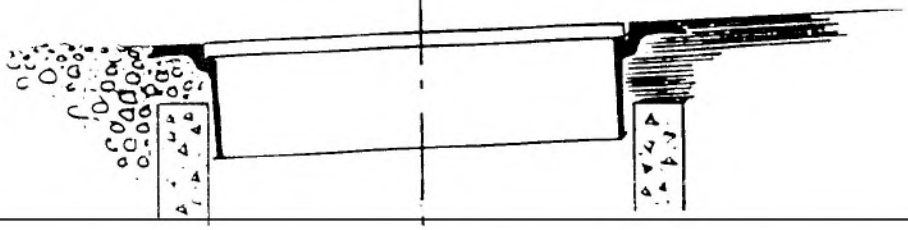

3 FLOATING MANHOLE FRAMES MUST ONLY BE USED AS "FLOATING"! FLOATING MANHOLE FRAMES MUST NOT REST ON THE CONCRETE RING - THEY SHALL FLOAT IN THE ROAD MATERIALS

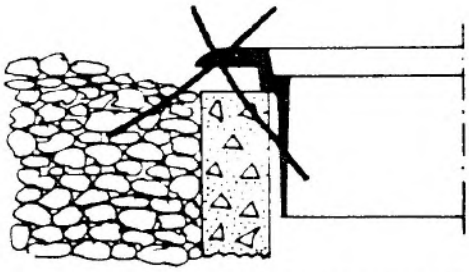

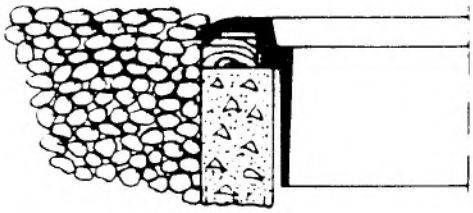

4 **DO NOT DRIVE ACROSS A MANHOLE WHERE THE FRAME RESTS ON THE CONCRETE RING.** THE NF-80 FRAME WILL NOT BE DAMAGED, BUT WILL LIKELY FLIP AND THIS WILL PROBABLY DAMAGE THE CONCRETE RINGS.

5 SOME PIECES OF 2" x 4" UNDER THE FLANGE DURING CONSTRUCTION MAY SAVE THE MANHOLE, IF THE ROAD MATERIALS CANNOT BE USED.

INSTALL THE FRAMES RIGHT!

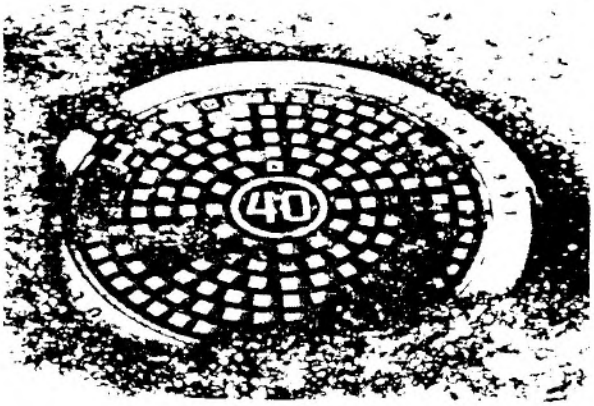

NOT LIKE THIS!

6 **DEMAND FROM THE PAVING CONTRACTOR:**

- THAT THE FRAME IS LEVEL WITH THE ROAD SURFACE, NOT A LITTLE LOWER.
- THAT THE COVER IS CLEANED PROPERLY BEFORE THE COMPACTOR ARRIVES.
- THAT THE LIFTHOLES ARE CLEANED OUT BEFORE THE MANHOLE IS LEFT.

DO NOT ACCEPT THE INSTALLATION IF THE FRAME IS 5mm BELOW THE ROAD SURFACE.
THE LIFTHOLES MUST BE CLEANED OUT WHILE THE ASPHALT IS HOT.

Norwood Foundry LIMITED
SINCE 1905

IMPORTANT TIPS ABOUT THE USE OF FLOATING MANHOLE FRAMES

NF-80 / NF-90 TIPS